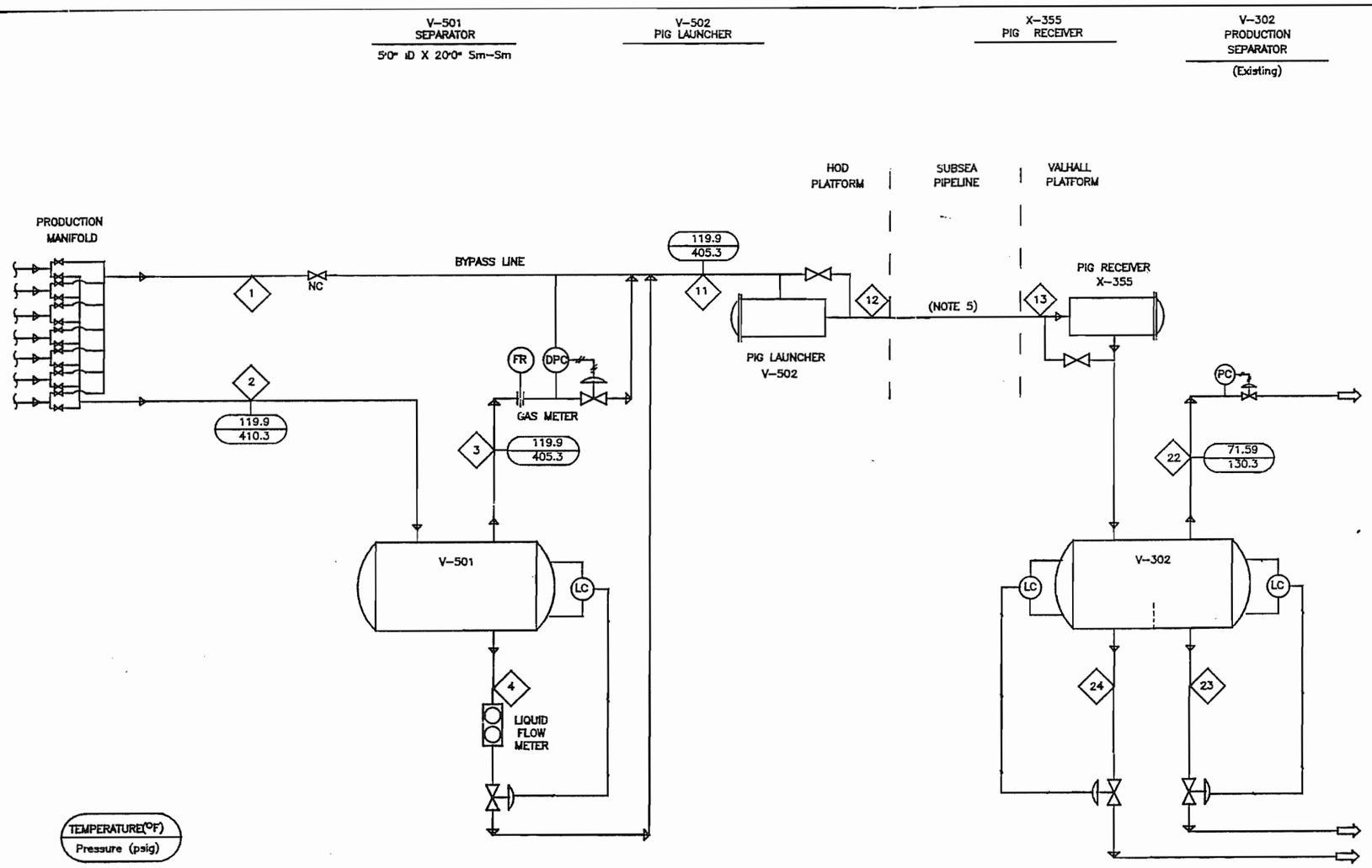

(Note 3)

Stream Name		2	3	4	11	12	13	22	23	24
Phase		2 Phase	Vapor	2 Phase	2 Phase	2 Phase	2 Phase	Vapor	Liquid	Liquid
Temperature	(F)	119.95	119.86	119.86	119.86	119.76	71.93	71.59	71.59	71.59
Pressure	(PSIG)	410.30	405.30	405.30	405.30	400.30	138.86	130.30	130.30	130.30
Vapor Flow Rate	(MMSCF/d)	18.42	18.47		18.47	18.52	20.39	20.50		
Liq. HC Flow (T-P)	(bbl/d)	34595.59		34559.53	34559.53	34523.24	32289.35		32202.61	95.95
Total Liq. Flow (T-P)	(bbl/d)	34687.08		34650.91	34650.91	34614.51	32385.41		32202.61	95.95
Total Flow	(LB/hr)	0.4227E+06	41277.40	0.3814E+06	0.4227E+06	0.4227E+06	0.4227E+06	46741.70	0.3745E+06	1425.57
Total Flow	(LBMOL/hr)	4412.13	2027.94	2384.19	4412.13	4412.13	4412.13	2250.95	2082.09	79.10
Ave. Mol. Weight	(LB/LBMOL)	95.80	20.35	159.97	95.80	95.80	95.80	20.77	179.87	18.02
Density (liquid)	(LB/FT3)	48.98		47.01	47.01	47.04	49.63		49.71	63.51
Density (vapor)	(LB/FT3)	1.49	1.47		1.47	1.45	0.5885	0.5455		
Viscosity (liquid)	(cP)	1.73		1.73	1.73	1.74	3.34		3.40	0.5724
Viscosity (vapor)	(cP)	0.0119	0.0119		0.0119	0.0119	0.0106	0.0106		
Molar Flow (LBMOL/HR)	Mol. Weight									
NITROGEN	28.01	16.8700	16.2508	0.6191	16.8700	16.8700	16.8700	16.6981	0.1717	0.7196E-04
CO2	44.01	35.9028	26.6805	9.2223	35.9028	35.9028	35.9028	31.2324	4.6632	0.0072
METHANE	16.04	0.1879E+04	0.1656E+04	223.2000	0.1879E+04	0.1879E+04	0.1879E+04	0.1796E+04	83.1540	0.0253
ETHANE	30.07	268.1890	169.3830	98.8064	268.1890	268.1890	268.1890	210.0520	58.1279	0.0095
PROPANE	44.09	250.4540	94.1892	156.2650	250.4540	250.4540	250.4540	125.2670	125.1820	0.0056
I-BUTANE	58.12	61.8566	13.9634	47.8932	61.8566	61.8566	61.8566	17.9182	43.9367	0.0017
N-BUTANE	58.12	138.8530	24.3911	114.4620	138.8530	138.8530	138.8530	30.2798	108.5710	0.0019
I-PENTANE	72.15	68.7776	6.2877	62.4899	68.7776	68.7776	68.7776	6.8667	61.9102	0.6445E-03
N-PENTANE	72.15	73.1033	5.3645	67.7387	73.1033	73.1033	73.1033	5.5367	67.5659	0.6478E-03
N-HEXANE	86.17	119.3880	3.5378	115.8500	119.3880	119.3880	119.3880	2.9309	116.4560	0.1780E-03
CUT1	100.20	143.9920	1.9553	142.0360	143.9920	143.9920	143.9920	1.3579	142.6340	0.3325E-04
CUT2	119.84	196.3540	0.7108	195.6430	196.3540	196.3540	196.3540	0.3570	195.9970	0.2541E-05
CUT3	155.74	219.0680	0.0870	218.9810	219.0680	219.0680	219.0680	0.0258	219.0420	0.1329E-07
CUT4	204.15	249.7490	0.0061	249.7430	249.7490	249.7490	249.7490	0.9439E-03	249.7480	0.2755E-09
CUT5	266.11	239.6010	0.2068E-03	239.6010	239.6010	239.6010	239.6010	0.1408E-04	239.6010	0.4108E-11
CUT6	340.79	156.4930	0.2498E-05	156.4930	156.4930	156.4930	156.4930	0.6244E-07	156.4930	0.1822E-13
CUT7	469.71	207.4960	0.3302E-10	207.4960	207.4960	207.4960	207.4960	0.2099E-10	207.4960	-
WATER	18.02	86.5000	8.8444	77.6556	86.4999	86.4999	86.4999	6.1185	1.3377	79.0436

NOTES:

1. Standard conditions are 14.7 psia and 60 F.
2. Barometric Pressure is 14.7 psia.
3. Immiscible water is treated as a separate phase in box score.
4. Properties of petroleum cuts are:

	MW	BP	API Grav.
Cut 1	100.20	200	68.7
Cut 2	119.84	269	59.2
Cut 3	155.74	372	48.8
Cut 4	204.15	488	39.1
Cut 5	266.11	614	30.9
Cut 6	340.79	747	24.4
Cut 7	469.71	952	16.2

5. The subsea pipeline is a nominal 12 in. diameter.
6. V-302 is shown as being dedicated to Hod production. Other design scenarios leave V-301 and V-302 manifolded together, and Valhall and Hod production comingled prior to separation.
7. Valhall oil/oil exchangers (E-313 A & B), upstream of V-301 and V-302, are bypassed in this design scenario.

THIS DRAWING IS THE PROPERTY OF AND EMBODIES CONFIDENTIAL INFORMATION OF AMOCO NORWAY OIL COMPANY. THE DRAWING AND THE INFORMATION THEREON SHALL NOT BE REPRODUCED OR DISCLOSED TO ANY OTHER PARTY OR USED FOR ANY PURPOSE OTHER THAN FOR THE BENEFIT OF AND AS AUTHORIZED BY AMOCO NORWAY OIL COMPANY.

NO	DESCRIPTION	BY	AP	AP	DATE
	REVISION				

PC NO. 556

APPROVED FOR CONSTRUCTION BY ____ DATE ____

PROCESS BY ____ MECHANICAL BY ____

Amoco Norway Oil Company

Process Flow Diagram

Project : HOD DEVELOPMENT

Plant : HOD/VALHALL

Model : HOD

Case : INITIAL PRODUCTION

Drawing : P 5100 Revision : 1 Sheet 1 of 1

EXHIBIT 5.1

LINE DESIGNATION

3" - PF - 5110 - 1 - A

- A — PIPING SPECIFICATION
- 1 — (OPTIONAL) LINES IN PARALLEL
- 5110 — SEQUENCE NUMBER (LINE)
- PF — SERVICE DESIGNATION
- 3" — LINE SIZE (INCHES)

SERVICE DESIGNATION

AC - COMBUSTION AIR	ME - METHANOL
AI - INSTRUMENT AIR	MH - HEATING MEDIUM
AU - UTILITY AIR	OF - FUEL OIL
AS - STARTING AIR	OL - LUBE OIL
AV - VENTILATION OR COOLING AIR	OS - SEAL OIL
CF - AFFF CONCENTRATE	OV - HYDRAULIC OIL
CG - GLYCOL	PF - PROCESS FLUID (NO DISTINCTION)
CI - CHEMICAL INJECTION	RH - RELIEF
CV - CASING VENT	RL - RELIEF LOW TEMPERATURE
DC - CLOSED DRAIN	VA - VENT TO ATMOSPHERE
DO - OPEN DRAIN	WF - FIRE WATER
DS - SANITARY DRAIN	WH - HOT WATER
FJ - JET FUEL	WP - POTABLE WATER
GF - FUEL GAS	WS - SEA WATER DRILLING
GN - NITROGEN OR INERT GAS	WD - FRESH WATER DRILLING
GE - EXHAUST GAS	WC - COOLING WATER
BB - BULK STORAGE BARITE	
CB - BULK STORAGE CEMENT	
OM - OIL-BASED DRILLING MUD	

NOTE:

SERVICE DESIGNATION ABBREVIATIONS ARE NOT STANDARDIZED. ADDITIONAL DESIGNATIONS ARE GENERATED AS REQUIRED.

PIPE SPECIFICATION CODE

CLASS	ANSI	SERVICE
A	150 LB	NON-CORROSIVE PROCESS HYDROCARBONS, GLYCOL, FUEL GAS, DIESEL OIL, PRODUCED WATER, RELIEFS AND VENTS, DRAINS, HEATING MEDIUM
B	300 LB	NON-CORROSIVE PROCESS HYDROCARBONS, GLYCOL, FUEL GAS, HEATING MEDIUM, PRODUCED WATER
D	600 LB	NON-CORROSIVE PROCESS HYDROCARBONS, GLYCOL, PRODUCED WATER
E	900 LB	NON-CORROSIVE PROCESS HYDROCARBONS, GLYCOL, PRODUCED WATER
G	2500 LB	NON-CORROSIVE PROCESS HYDROCARBONS
L	150 LB	INSTRUMENT AIR, UTILITY AIR, POTABLE WATER
L	COPPER	DOMESTIC HOT AND COLD WATER
M	150 LB	NON-CORROSIVE PROCESS HYDROCARBONS
N	300 LB	NON-CORROSIVE PROCESS HYDROCARBONS
[illegible]	900 LB	NON-CORROSIVE PROCESS HYDROCARBONS
S	150 LB	ROTATING EQUIPMENT SEAL OIL & LUBE OIL, CHEMICALS
T	600 LB	ROTATING EQUIPMENT SEAL OIL, CHEMICALS
U	300 LB	ROTATING EQUIPMENT SEAL OIL, CHEMICALS
V	900 LB	ROTATING EQUIPMENT SEAL OIL, CHEMICALS
W	150 LB	FIRE WATER, SEA WATER
X	150 LB	NON-CORROSIVE HYDROCARBON RELIEF
Y	PLASTIC UPVC	DOMESTIC SOIL WASTE
LP	600 LB	OIL AND GAS PIPELINE

EQUIPMENT NUMBERING SYSTEM

E - 5 - 01 - A

- A — ONLY USED WITH STANDBY AND PARALLEL UNITS A-B-C ---
- 01 — 01 - 30 = PROCESS; 31 - 50 = PROCESS UTILITY; 51 - 80 = MECH. UTILITY; 81 - 99 = PIPE & SAFETY (DOES NOT APPLY FOR ELECTRICAL EQUIPMENT)
- 5 — 5 = HOD; 6 = SETOR
- E — E = EXCHANGERS/AIR COOLERS; V = PRESSURE VESSELS; K = COMPRESSORS/EXPANDERS; P = PUMPS; T = ATMOSPHERIC TANKS; X = MISC. EQUIPMENT; G = GENERATORS ELECTRICAL EQUIPMENT; H = FIRED HEATERS

THERMAL INSULATION CLASSES

A = PERSONNEL PROTECTION
B = HEAT CONSERVATION
C = ELECTRICALLY TRACED (HEAT CONSERVATION)
D = COLD CONSERVATION
E = ANTI-CONDENSATION (EXTERNAL)

LINE SYMBOLS

- DIRECTION OF FLOW — MAJOR PROCESS LINE
- SECONDARY LINE
- AUXILLIARY LINE
- B — INSULATED LINE (INSULATION CLASS: B)
- ~C — ELECTRICALLY TRACED AND INSULATED LINE (INSULATION CLASS: C)
- FUTURE LINE
- REFERENCE LINE
- D / B — CHANGE OF SPECIFICATION
- INDICATES LINE SIZE CHANGE ONLY. ACTUAL FITTING TO BE CONFIRMED BY THE PIPING SPECIFICATIONS.
- 3025 | 3026 — CHANGE OF LINE NUMBER
- BLIND FLANGE, WELD CAP AND PIPE PLUG INDICATE END OF LINE. ACTUAL FITTING TO BE CONFIRED BY THE PIPING SPECIFICATION.

GENERAL SYMBOLS

BALL VALVE	GATE VALVE
CHECK VALVE	GLOBE VALVE
PLUG VALVE	3-WAY VALVE
4 WAY VALVE	Y-VALVE
NEEDLE VALVE	BUTTERFLY VALVE
V-BALL VALVE	ANGLE VALVE
CHOKE VALVE	GATE VALVE WITH FLOW RESTRICTION ORIFICE
DAMPER*	

NOTE:

* INDICATES ITEM WHICH MUST BE IDENTIFIED WITH PROPER DESCRIPTION.

SIP 333 — SPECIAL PIPING ITEM TAG

SID - DRILLING PLATFORM
SIP - PRODUCTION PLATFORM
SIQ - QUARTERS PLATFORM

NORMALLY OPEN / NORMALLY CLOSED — SPECTACLE BLIND

WIRE MESH SCREEN

FLAME ARRESTOR WITH GOOSE-NECK TERMINATION

OPEN DRAIN

CLOSED DRAIN (D.C.)

VENT TO ATMOSPHERE OR VACUUM BREAKER WITH HAT TERMINATION

SILENCER

AUTOMATIC DRAINER

EDUCTOR OR EJECTOR

AIR RELEASE TRAP

MIXING TEE

DRIP RING (WITH BLEED VALVE AND PLUG)

EXPANSION JOINT

HOSE CONNECTION

TEMPORARY STRAINER FOR PUMP AND COMPRESSOR SUCTION (ARROW SHOWS FLOW DIRECTION)

IN-LINE BASKET STRAINER

IN-LINE DUPLEX STRAINER

PULSATION DAMPENER

CHOKE

'Y'-TYPE STRAINER

CENTRIFUGAL PUMP

POSITIVE DISPLACEMENT PUMP

VALVE DESIGNATION

1" D 2 S O Z

- Z — END CONNECTION:
  - S - SCREWED
  - R - RAISED FACE
  - F - FLAT FACE
  - J - RTJ
  - W - WELDED
  - Z - SOCKET WELD
  - V - VICTUALIC COUPLING
  - X - SOLDER JOINT
- O — SPECIAL VALVE TYPE:
  - F - FULL OPENING
  - S - SHORT PATTERN
  - V - VENTURI
  - W - WAFER
  - P - PIPELINE
  - L - LIFT
  - O - NO. SPECIAL TYPE, BUT DIFFERENT END CONNECTIONS
  - G - FULL OPENING WITH SECONDARY GREASE SEAL
- S — END CONNECTION:
  - A - API TYPE 6Bx
  - S - SCREWED
  - R - RAISED FACE
  - F - FLAT FACE
  - J - RTJ
  - W - WELDED
  - Z - SOCKET WELD
  - V - VICTUALIC COUPLING
  - X - SOLDER JOINT
  - U - UNION
- 2 — VALVE TYPE:
  - 1 - GATE
  - 2 - BALL
  - 3 - PLUG
  - 4 - GLOBE
  - 5 - CHECK
  - 6 - NEEDLE
  - 7 - BUTTERFLY
- D — VALVE SPECIFICATION:
  - A - 150 LB CARBON STL.
  - B - 300 LB CARBON STL.
  - D - 600 LB CARBON STL.
  - E - 900 LB CARBON STL.
  - F - 1500 LB CARBON STL.
  - G - 2500 LB CARBON STL.
  - M - 150 LB CARBON STL. (LOW TEMP.)
  - N - 300 LB CARBON STL. (LOW TEMP.)
  - P - 600 LB CARBON STL. (LOW TEMP.)
  - Q - 900 LB CARBON STL. (LOW TEMP.)
  - R - 1500 LB CARBON STL. (LOW TEMP.)
  - S - 150 LB STAINLESS STL.
  - T - 600 LB STAINLESS STL.
  - U - 300 LB STAINLESS STL.
  - V - 900 LB STAINLESS STL.
  - W - 150 LB BRONZE
  - X - 150 LB 3½ Ni (LOW TEMP.)
  - Z - 600 LB 3½ Ni (LOW TEMP.)
- 1" — VALVE SIZE (INCHES)

FIRE PROTECTION SYMBOLS

PORTABLE FIRE EXTINGUISHER

PORTABLE WHEELED EXTINGUISHER

ABBREVIATIONS

CSC	CAR SEAL CLOSED	SC	SAMPLE CONNECTION
CSO	CAR SEAL OPEN	TEMP	TEMPORARY (START-UP USE ONLY)
EL	ELEVATION	POC	PURGE-OUT CONNECTION
LC	LOCK CLOSED	HTC	HYDRO-TEST CONNECTION
LO	LOCK OPEN		
MW	MANWAY		
NC	NORMALLY CLOSED		
NO	NORMALLY OPEN		
NLL	NORMAL LIQUID LEVEL		

THIS DRAWING IS THE PROPERTY OF AND EMBODIES CONFIDENTIAL INFORMATION OF AMOCO NORWAY OIL COMPANY. THE DRAWING AND THE INFORMATION THEREON SHALL NOT BE REPRODUCED OR DISCLOSED TO ANY OTHER PARTY OR USED FOR ANY PURPOSE OTHER THAN FOR THE BENEFIT OF AND AS AUTHORIZED BY AMOCO NORWAY OIL COMPANY.

NO.	DESCRIPTION	DR	CK	AP	AP	DATE
	REVISION					

APPROP. NO. 556 (HOD)

APPROVED FOR CONSTRUCTION
BY _____ DATE _____

PROCESS			MECHANICAL		
BY			BY		
DR	DATE	CK	DATE	AP	DATE

Amoco Norway Oil Company

PIPING & INSTRUMENT DIAGRAM
LEGEND - GENERAL

HOD PLATFORM

SCALE	FILE NO	DWG NO	REV
N.A.		P-5110	1

EXHIBIT 5.2

INSTRUMENT IDENTIFICATION LETTERS

AE	ANALYSER ELEMENT
AI	ANALYSER
AR	ANALYSER RECORDER
AIC	ANALYSER INDICATOR CONTROLLER
ARC	ANALYSER RECORDER CONTROLLER
AT	ANALYSER TRANSMITTER
AY	ANALYSER COMPUTING RELAY
BE	BURNER FLAME DETECTOR
BI	BURNER FLAME INDICATOR
BS	BURNER FLAME SWITCH
BX	BURNER FLAME TV RECEIVER
CE	CONDUCTIVITY CEIL
CI	CONDUCTIVITY INDICATOR
CR	CONDUCTIVITY RECORDER
CIC	CONDUCTIVITY INDICATOR CONTROLLER
CRC	CONDUCTIVITY RECORDER CONTROLLER
CT	CONDUCTIVITY TRANSMITTER
CV	CONDUCTIVITY VALVE
DX	DENSITY RADIOACTIVE SOURCE
DE	DENSITY ELEMENT
DI	DENSITY INDICATOR
DR	DENSITY RECORDER
DIC	DENSITY INDICATOR CONTROLLER
DRC	DENSITY RECORDER CONTROLLER
DT	DENSITY TRANSMITTER
DV	DENSITY VALVE
DY	DENSITY COMPUTING RELAY
EHS	EMERGENCY HAND SWITCH
ESDV	EMERGENCY SHUT-DOWN VALVE
FE	FLOW ELEMENT
FI	FLOW INDICATOR
FR	FLOW RECORDER
FC	FLOW CONTROLLER (BLIND)
FIC	FLOW INDICATOR CONTROLLER
FRC	FLOW RECORDER CONTROLLER
FT	FLOW TRANSMITTER
FFRC	FLOW RATIO RECORDER CONTROLLER
FFIC	FLOW RATIO INDICATOR CONTROLLER
FFC	FLOW RATIO CONTROLLER (BLIND)
FFV	FLOW RATIO VALVE
FO	FLOW RESTRICTION ORIFICE
FG	FLOW SIGHT GLASS
FQI	FLOW TOTALISER WITH INDICATION
FQIS	FLOW TOTALISER WITH INDICATION AND SWITCH
FV	FLOW VALVE
FY	FLOW COMPUTING RELAY (SPECIAL PURPOSE)
FZ	FLOW ACTUATOR
HIC	HAND INDICATOR, CONTROLLER
HCV	HAND CONTROL VALVE
HS	HAND SWITCH
HJS	HAND SCANNING SWITCH
HK	HAND STATION
IE	CURRENT ELEMENT
IR	CURRENT RECORDER
JI	POWER INDICATOR (WATTMETER)
KI	CLOCK
KT	TIME SCHEDULE TRANSMITTER
KC	TIME CYCLE CONTROLLER (BLIND)
KIC	TIME CYCLE INDICATOR CONTROLLER
LG	LEVEL GAUGE GLASS
LI	LEVEL INDICATOR
LT	LEVEL TRANSMITTER
LR	LEVEL RECORDER
LC	LEVEL CONTROLLER (BLIND)
LCV	LEVEL REGULATOR SELF ACTUATED OR CONTINUOUS DRAINER
LIC	LEVEL INDICATOR CONTROLLER
LRC	LEVEL RECORDER CONTROLLER
LV	LEVEL VALVE
LY	LEVEL COMPUTING RELAY (SPECIAL PURPOSE)
ME	MOISTURE ELEMENT
MI	MOISTURE INDICATOR
MR	MOISTURE RECORDER
NAL	UV RADIATION ALARM LOW
NI	UV RADIATION INDICATOR
NSL	UV RADIATION SWITCH LOW
NT	UV RADIATION TRANSMITTER
POS	PRESSURE DIFFERENTIAL SWITCH
PDI	PRESSURE DIFFERENTIAL INDICATOR
PI	PRESSURE INDICATOR
PT	PRESSURE TRANSMITTER (BLIND)
PR	PRESSURE RECORDER
PRC	PRESSURE RECORDER CONTROLLER
PC	PRESSURE CONTROLLER (BLIND)
PIC	PRESSURE INDICATOR CONTROLLER
PDT	PRESSURE DIFFERENTIAL TRANSMITTER
PDR	PRESSURE DIFFERENTIAL RECORDER
PCV	PRESSURE REGULATOR (SELF ACTUATED)
PSV	PRESSURE SAFETY VALVE
PSE	PRESSURE SAFETY HEAD (RUPTURE DISC.)
PV	PRESSURE VALVE
PP	POINT FOR PRESSURE GAUGE
PY	PRESSURE COMPUTING RELAY (SPECIAL PURPOSE)
PZ	PRESSURE ACTUATOR
SG	SIGHT GLASS
SI	SPEED INDICATOR
ST	SPEED TRANSMITTER (BLIND)
SC	SPEED CONTROLLER (BLIND)
SIC	SPEED INDICATOR CONTROLLER
SRC	SPEED RECORDER CONTROLLER
SV	SPEED VALVE
SOV	SOLENOID VALVE
ST	SPEED TRANSMITTER
TE	TEMPERATURE ELEMENT
TW	THERMOMETER WELL
TI	TEMPERATURE INDICATOR
TT	TEMPERATURE TRANSMITTER (BLIND)
TR	TEMPERATURE RECORDER (CONTINUOUS RECORD)
TJR	TEMPERATURE SCANNING RECORDER (MULTI-POINT)
TIC	TEMPERATURE INDICATOR CONTROLLER
TRC	TEMPERATURE RECORDER CONTROLLER
TC	TEMPERATURE CONTROLLER (BLIND)
TCV	TEMPERATURE REGULATOR (SELF-ACTUATED)
TDT	TEMPERATURE DIFFERENTIAL TRANSMITTER
TDRC	TEMPERATURE DIFFERENTIAL RECORDER CONTROLLER
TJI	TEMPERATURE MULTI-POINT SCANNING INDICATOR
TV	TEMPERATURE VALVE
TZ	TEMPERATURE CONTROL, FAN PITCH POSITIONER
TY	TEMPERATURE COMPUTING RELAY (SPECIAL PURPOSE)
UY	MULTIVARIABLE RELAY
UR	TREND RECORDER
UA	MULTIVARIABLE ANNUNCIATOR
USDV	UNIT SHUT-DOWN VALVE
VT	VISCOSITY TRANSMITTER
VR	VISCOSITY RECORDER
VRC	VISCOSITY RECORDER CONTROLLER
VV	VISCOSITY VALVE
WR	WEIGHT RECORDER
WT	WEIGHT TRANSMITTER
XA	MISCELLANEOUS ALARM
XI	MISCELLANEOUS INDICATOR
XT	MISCELLANEOUS TRANSMITTER
XV	MISCELLANEOUS ON-OFF CONTROL VALVE
YSV	FIRE SAFETY VALVE
ZI	POSITION INDICATOR
ZS	POSITION SWITCH (LIMIT)
ZT	POSITION TRANSMITTER

SWITCHES AND ALARMS, PNEUMATIC OR ELECTRIC

LSH	LEVEL SWITCH HIGH
LSL	LEVEL SWITCH LOW
LSHL	LEVEL SWITCH HIGH LOW
LAH	LEVEL ALARM HIGH
LAL	LEVEL ALARM LOW
LLH	LEVEL LIGHT (PILOT) HIGH
LLL	LEVEL LIGHT (PILOT) LOW
LAHH	LEVEL ALARM HIGH HIGH (TRIP INITIATION)
LALL	LEVEL ALARM LOW LOW (TRIP INITIATION)

ALL OTHER SWITCHES AND ALARMS ARE SIMILARLY DESIGNATED BY SUBSTITUTING THE PROPER LETTER OR LETTERS IN THE FIRST POSITION, I.E. FAH INDICATES FLOW ALARM HIGH, PSL INDICATES PRESSURE SWITCH LOW.

FUNCTION DESIGNATION FOR RELAYS

Σ	SUM (ADD)
Δ	DIFFERENCE (SUBSTRACT)
±	BIAS
×	MULTIPLY
÷	DIVIDE
√	EXTRACT SQUARE ROOT
F(x)	CHARACTERIZE
⊔	BOOST
▷	HIGH SELECT - SELECTS HIGHEST MEASURED VARIABLE
◁	LOW SELECT - SELECTS LOWEST MEASURED VARIABLE
I/P	CURRENT TO PNEUMATIC
P/I	PNEUMATIC TO CURRENT
E/P	VOLTAGE TO PNEUMATIC
E/I	VOLTAGE TO CURRENT
AVG	AVERAGE
M	MEASURED VARIABLE
SP	SET POINT SIGNAL

INSTRUMENT LOOP NUMBERING SYSTEM

L A H H — 5049

LETTERS TO DESCRIBE FUNCTION (SEE INSTRUMENT IDENTIFICATION LETTERS ABOVE)

EACH DRAWING HAS BEEN ASSIGNED 50 INSTRUMENT TAG NUMBERS

INSTRUMENT LINE SYMBOLS

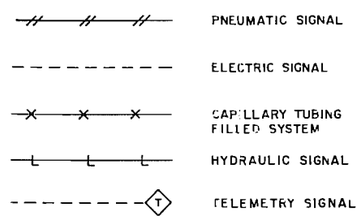

INSTRUMENT SYMBOLS

ACTUATOR TYPES

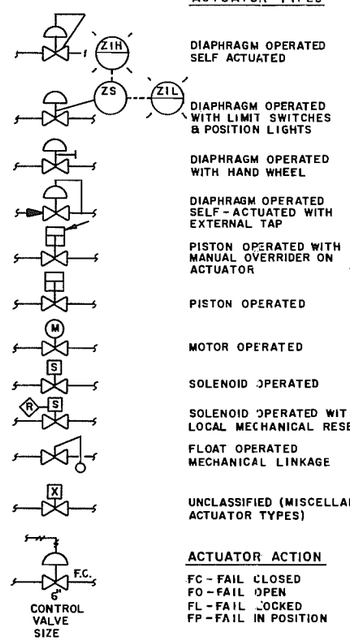

ACTUATOR ACTION

FC - FAIL CLOSED
FO - FAIL OPEN
FL - FAIL LOCKED
FP - FAIL IN POSITION

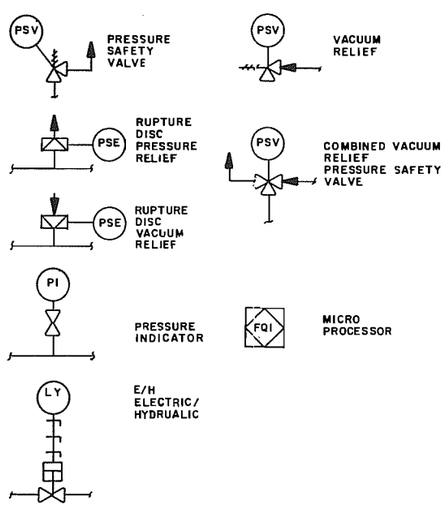

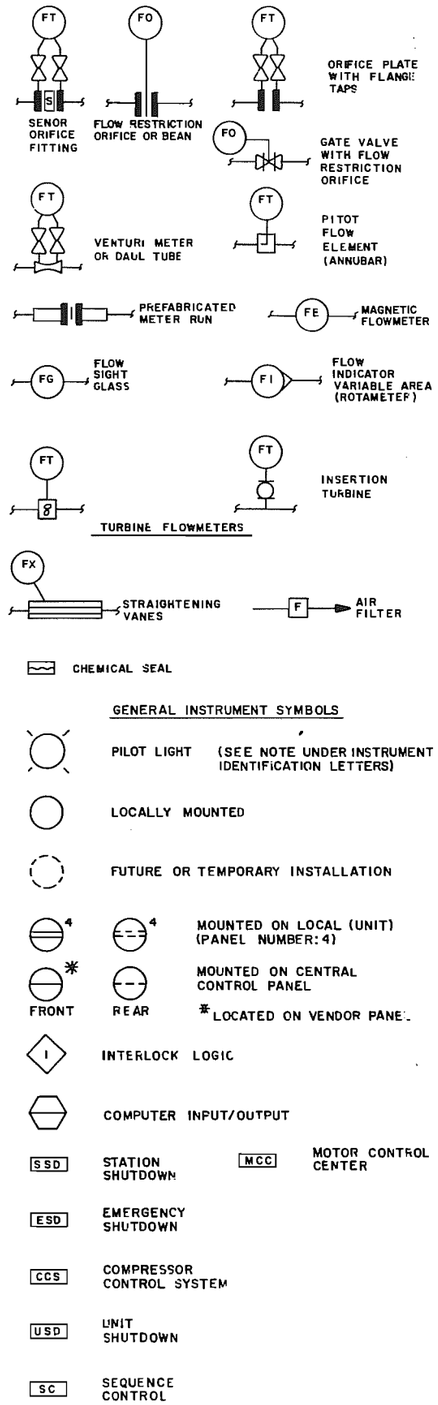

GENERAL INSTRUMENT SYMBOLS

ABBREVIATIONS

AS - AIR SUPPLY
GS - GAS SUPPLY
HS - HYDRAULIC SUPPLY
SP - SET POINT
SD - SHUT DOWN

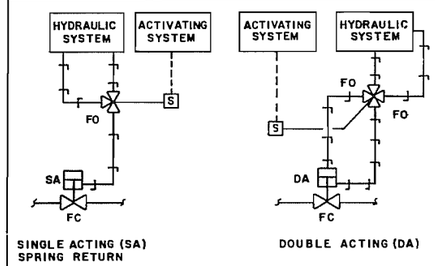

DRAWING INDEX

DRAWING	TITLE
P-5100	PROCESS FLOW DIAGRAM
P-5110	LEGEND - GENERAL
P-5112	LEGEND - INSTRUMENTATION AND DRAWING INDEX
P-5120	WELLHEAD AREA
P-5122	SEPARATOR AND LAUNCHER
P-5130	POWER GENERATION AND DIESEL SYSTEM
P-5140	POTABLE WATER SYSTEM
P-5142	DRAIN SYSTEMS AND CHEMICAL INJECTION
P-5170	VALHALL MODIFICATIONS

THIS DRAWING IS THE PROPERTY OF AND EMBODIES CONFIDENTIAL INFORMATION OF AMOCO NORWAY OIL COMPANY. THE DRAWING AND THE INFORMATION THEREON SHALL NOT BE REPRODUCED OR DISCLOSED TO ANY OTHER PARTY OR USED FOR ANY PURPOSE OTHER THAN FOR THE BENEFIT OF AND AS AUTHORIZED BY AMOCO NORWAY OIL COMPANY.

NO.	DESCRIPTION	DR	CK	AP	AP	DATE
	REVISION					

APPROP. NO. 556 (HOD)

APPROVED FOR CONSTRUCTION
BY _____ DATE _____

PROCESS			MECHANICAL		
BY			BY		
DR	DATE	CK	DATE	AP	DATE

Amoco Norway Oil Company

PIPING & INSTRUMENT DIAGRAM
LEGEND - INSTRUMENTATION AND DRAWING INDEX
HOD PLATFORM

SCALE	FILE NO	DWG NO	REV
N.A.		P-5112	1

EXHIBIT 5.3

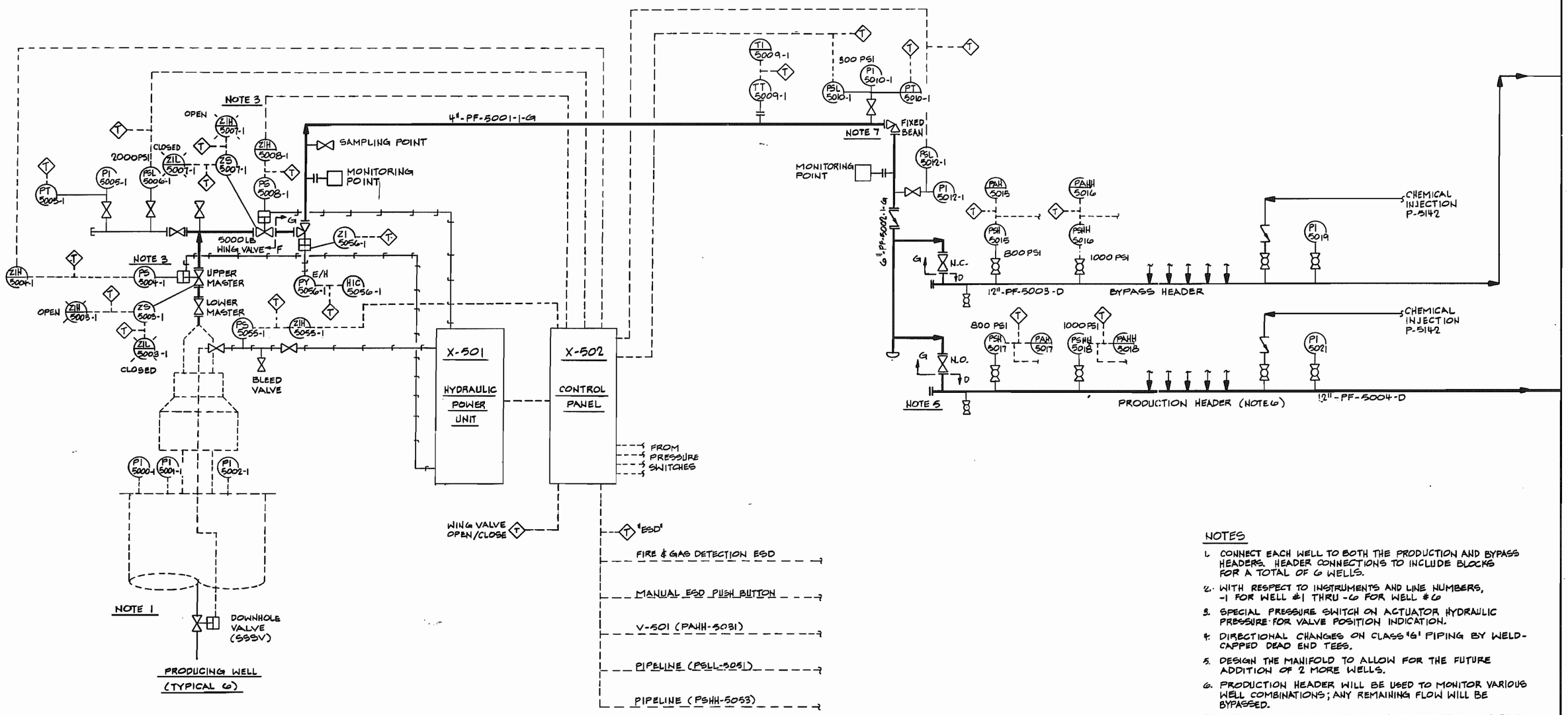

NOTES

1. CONNECT EACH WELL TO BOTH THE PRODUCTION AND BYPASS HEADERS. HEADER CONNECTIONS TO INCLUDE BLOCKS FOR A TOTAL OF 6 WELLS.
2. WITH RESPECT TO INSTRUMENTS AND LINE NUMBERS, -1 FOR WELL #1 THRU -6 FOR WELL #6
3. SPECIAL PRESSURE SWITCH ON ACTUATOR HYDRAULIC PRESSURE FOR VALVE POSITION INDICATION.
4. DIRECTIONAL CHANGES ON CLASS 'G' PIPING BY WELD-CAPPED DEAD END TEES.
5. DESIGN THE MANIFOLD TO ALLOW FOR THE FUTURE ADDITION OF 2 MORE WELLS.
6. PRODUCTION HEADER WILL BE USED TO MONITOR VARIOUS WELL COMBINATIONS; ANY REMAINING FLOW WILL BE BYPASSED.
7. NECESSITY FOR TWO CHOKE VALVES PER FLOWLINE TO BE DETERMINED DURING DETAIL DESIGN.

THIS DRAWING IS THE PROPERTY OF AND EMBODIES CONFIDENTIAL INFORMATION OF AMOCO NORWAY OIL COMPANY. THE DRAWING AND THE INFORMATION THEREON SHALL NOT BE REPRODUCED OR DISCLOSED TO ANY OTHER PARTY OR USED FOR ANY PURPOSE OTHER THAN FOR THE BENEFIT OF AND AS AUTHORIZED BY AMOCO NORWAY OIL COMPANY.

NO.	DESCRIPTION	DR/CK	AP	AP	DATE
	REVISION				

APPROP. NO. 556 (HOD)

APPROVED FOR CONSTRUCTION
BY _____ DATE _____

PROCESS		MECHANICAL	
BY		BY	

DR	DATE	CK	DATE	AP	DATE
TEC	9-17-87				

Amoco Norway Oil Company

PIPING & INSTRUMENT DIAGRAM
WELL HEAD AREA
HOD PLATFORM

SCALE	FILE NO	DWG NO	REV
NA		P-5120	2

EXHIBIT 5.4

V-501
SEPARATOR

SIZE: 60" I.D. x 20'-0" S/S
OPER. PRESS: 405 PSI TEMP: 140°F (MAX)
DESIGN PRESS: 1395 PSIG TEMP: 165°F
HYDRO: 2092 PSI

X-504
METER PROVER

V-502
PIG LAUNCHER

SIZE: 12" I.D. x 14'-0" F/S
OPER. PRESS: 395 PSI TEMP: 140°F (MAX)
DESIGN PRESS: 1395 PSI TEMP: 165°F
HYDRO: 2092 PSI

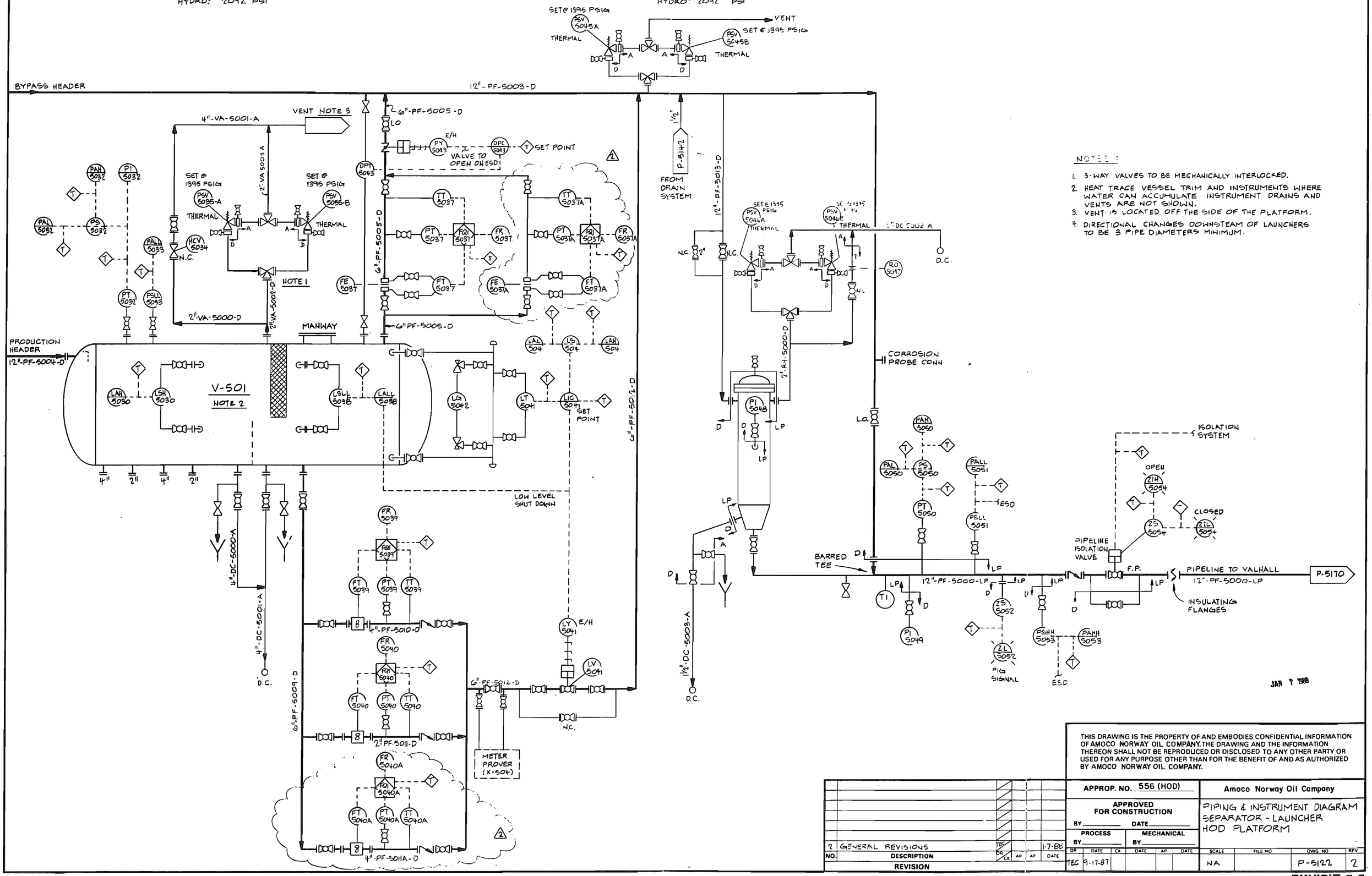

NOTES:

1. 3-WAY VALVES TO BE MECHANICALLY INTERLOCKED.
2. HEAT TRACE VESSEL TRIM AND INSTRUMENTS WHERE WATER CAN ACCUMULATE. INSTRUMENT DRAINS AND VENTS ARE NOT SHOWN.
3. VENT IS LOCATED OFF THE SIDE OF THE PLATFORM.
4. DIRECTIONAL CHANGES DOWNSTEAM OF LAUNCHERS TO BE 3 PIPE DIAMETERS MINIMUM.

THIS DRAWING IS THE PROPERTY OF AND EMBODIES CONFIDENTIAL INFORMATION OF AMOCO NORWAY OIL COMPANY. THE DRAWING AND THE INFORMATION THEREON SHALL NOT BE REPRODUCED OR DISCLOSED TO ANY OTHER PARTY OR USED FOR ANY PURPOSE OTHER THAN FOR THE BENEFIT OF AND AS AUTHORIZED BY AMOCO NORWAY OIL COMPANY.

NO.	DESCRIPTION	DR	DATE	CK	DATE	AP	DATE
2	GENERAL REVISIONS	TEC	1-7-88				

REVISION

APPROP. NO. 556 (HOD)

APPROVED FOR CONSTRUCTION
BY _____ DATE _____
PROCESS BY _____ MECHANICAL BY _____

Amoco Norway Oil Company

PIPING & INSTRUMENT DIAGRAM
SEPARATOR - LAUNCHER
HOD PLATFORM

DR	DATE	CK	DATE	AP	DATE	SCALE	FILE NO	DWG NO	REV
TEC	9-17-87					NA		P-5122	2

EXHIBIT 5.5

T-551
CRANE PEDESTAL
SIZE: 5'-0" I.D. x 20'-0"
DESIGN: ATMOS @ 0°F
TEST: HYDROSTATIC
CAPACITY: 63 BBLS

P-551 A & B
DIESEL TRANSFER PUMP
MOTOR: 3 HP
DESIGN: 10 GPM @ 30 PSI ΔP

V-551
DIESEL FILTER
COALESCER UNIT
FILTER: 20 MICRON
DESIGN: 55 PSIG @ 200°F
CAPACITY: 20 GPM

T-554
CRANE DAY TANK
SIZE: 3'-0" L x 3'-0" W x 4'-0" H
TEST: HYDROSTATIC
CAPACITY: 5 BBLS
DESIGN: ATMOS @ 0°F
(PART OF CRANE VENDOR PKG.)

G-551
DIESEL ENGINE GENERATOR
SKID: 10'-0" L x 4'-0" W x 6'-0" H
CAPACITY: 100 KW

T-552
GENERATOR DAY TANK
SIZE: 30" ID x 9'-0" FF
DESIGN: 25 PSIG @ 20/200°F
TEST: 38 PSIG
CAPACITY: 8 BBLS

G-552
DIESEL ENGINE
GENERATOR
SKID: 10'-0" L x 4'-0" W x 6'-0" H
CAPACITY: 100 KW

T-553
EMERGENCY GENERATOR
DAY TANK
SIZE: 30" I.D. x 4'-6" F/F
DESIGN: 25 PSIG @ 20/200°F
TEST: 38 PSIG
CAPACITY: 4 BBL

E-553
EMERGENCY GENERATOR
COOLER

G-553
DIESEL ENGINE
GENERATOR
SKID: 10'-0" L x 4'-0" W x 6'-0" H
CAPACITY: 100 KW

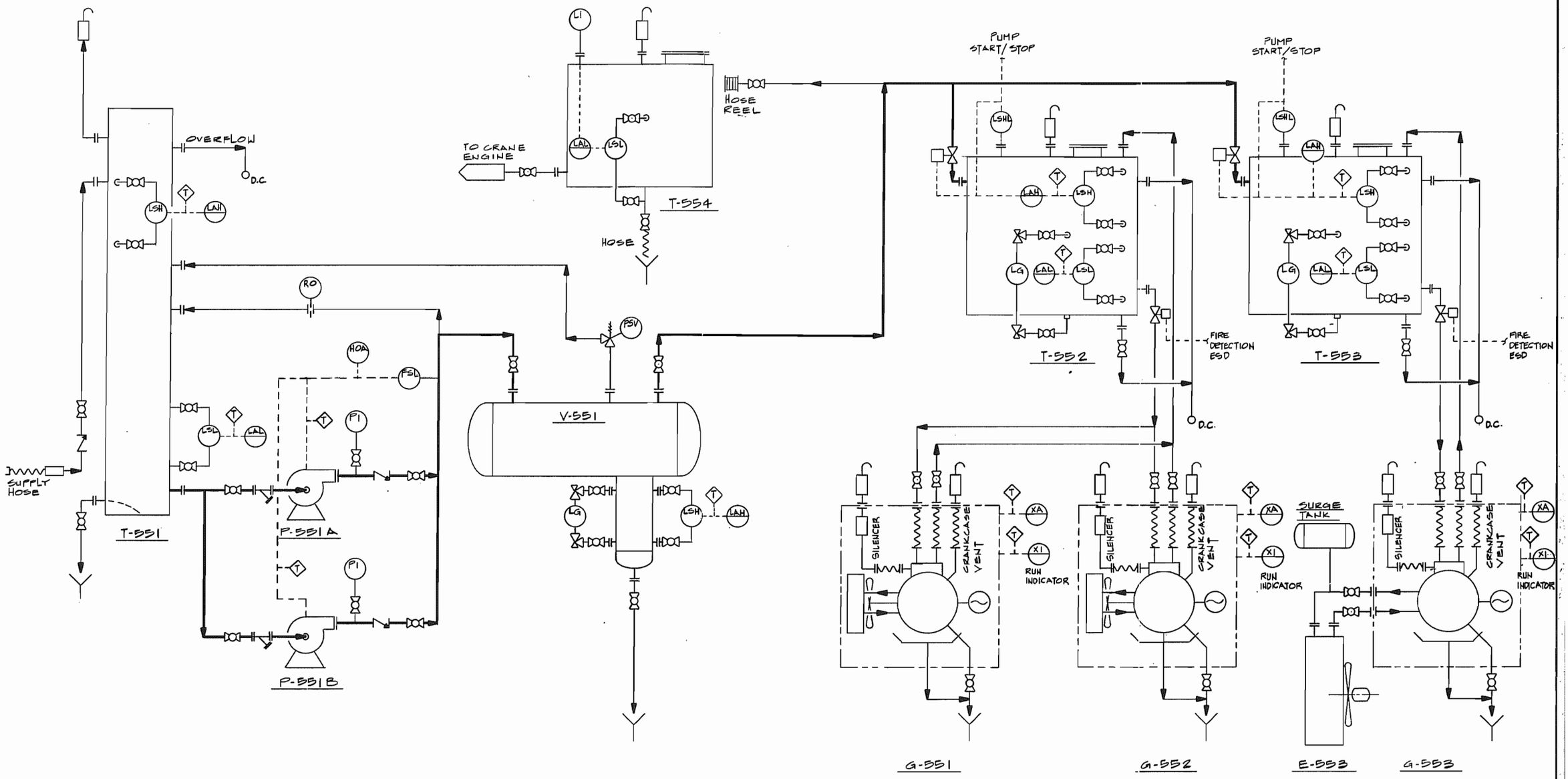

THIS DRAWING IS THE PROPERTY OF AND EMBODIES CONFIDENTIAL INFORMATION OF AMOCO NORWAY OIL COMPANY. THE DRAWING AND THE INFORMATION THEREON SHALL NOT BE REPRODUCED OR DISCLOSED TO ANY OTHER PARTY OR USED FOR ANY PURPOSE OTHER THAN FOR THE BENEFIT OF AND AS AUTHORIZED BY AMOCO NORWAY OIL COMPANY.

NO.	DESCRIPTION	DR/CK	A'	AP	DATE
	REVISION				

APPROP. NO. 556 (HOD)

APPROVED FOR CONSTRUCTION
BY _____ DATE _____

PROCESS			MECHANICAL		
BY			BY		
DR	DATE	CK	DATE	AP	DATE
TEC	9-17-87				

Amoco Norway Oil Company

PIPING & INSTRUMENT DIAGRAM
POWER GENERATION AND
DIESEL SYSTEM
HOD PLATFORM

SCALE	FILE NO	DWG NO	REV
		P-5130	1

EXHIBIT 5.6

T-560

POTABLE WATER STORAGE TANK

SIZE: 8'-0"L x 8'-0"W x 9'-0"H
DESIGN: ATMOS. @ 32° F
TEST: HYDROSTATIC
CAPACITY: 90 BBLS

P-560

POTABLE WATER PUMP

MOTOR: 3 HP
DESIGN: 20 GPM @ 50 PSI ΔP

X-560

CHLORINATION PACKAGE

MOTOR: NONE (ELECTRONIC)
DESIGN: .002 - .140 GPM

V-560

POTABLE WATER PRESSURE VESSEL

SIZE: 30" I.D. x 5'-0" S/S
DESIGN: 75 PSIG @ 200° F
CAPACITY: 4 BBLS

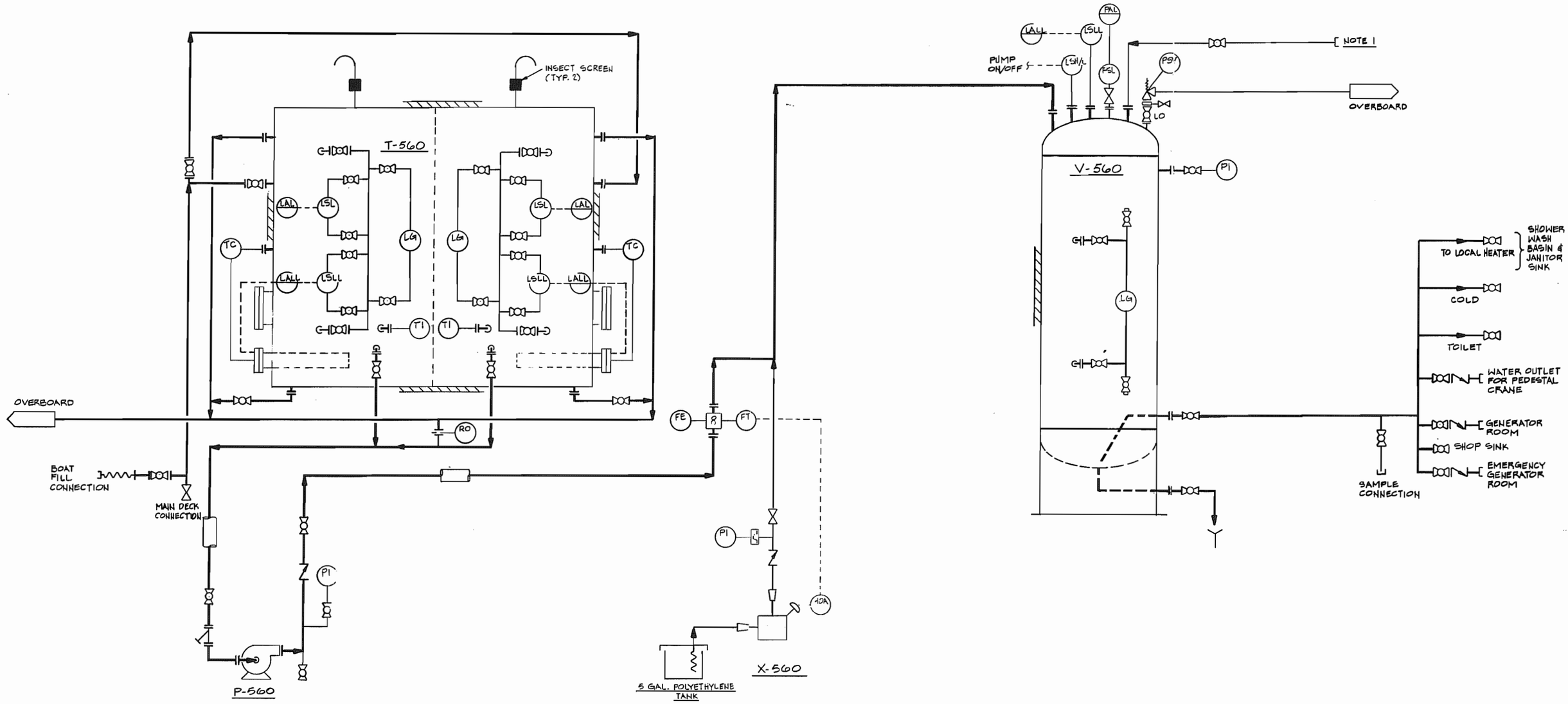

NOTES:

1. CONNECTION FOR CHARGING THE VESSEL WITH NITROGEN.

THIS DRAWING IS THE PROPERTY OF AND EMBODIES CONFIDENTIAL INFORMATION OF AMOCO NORWAY OIL COMPANY. THE DRAWING AND THE INFORMATION THEREON SHALL NOT BE REPRODUCED OR DISCLOSED TO ANY OTHER PARTY OR USED FOR ANY PURPOSE OTHER THAN FOR THE BENEFIT OF AND AS AUTHORIZED BY AMOCO NORWAY OIL COMPANY.

NO.	DESCRIPTION	DR/CK	AP	AP	DATE
	REVISION				

APPROP. NO. 556 (HOD)

APPROVED FOR CONSTRUCTION
BY_____ DATE_____

PROCESS			MECHANICAL		
BY_____			BY_____		
DR	DATE	CK	DATE	AP	DATE
TEC	9-11-87				

Amoco Norway Oil Company

PIPING & INSTRUMENT DIAGRAM
POTABLE WATER SYSTEM

HOD PLATFORM

SCALE	FILE NO	DWG NO	REV
N.A.		P-5140	1

EXHIBIT 5.7

T-570
SEA SUMP
SIZE: 36' O.D. x 200'

P-570
SEA SUMP PUMP
MOTOR: 15 HP
DESIGN: 10 GPM @ 500PSI ΔP

P-575
CHEMICAL INJECTION PUMP
MOTOR: 3 HP

P-576
CHEMICAL INJECTION PUMP
MOTOR: 3 HP

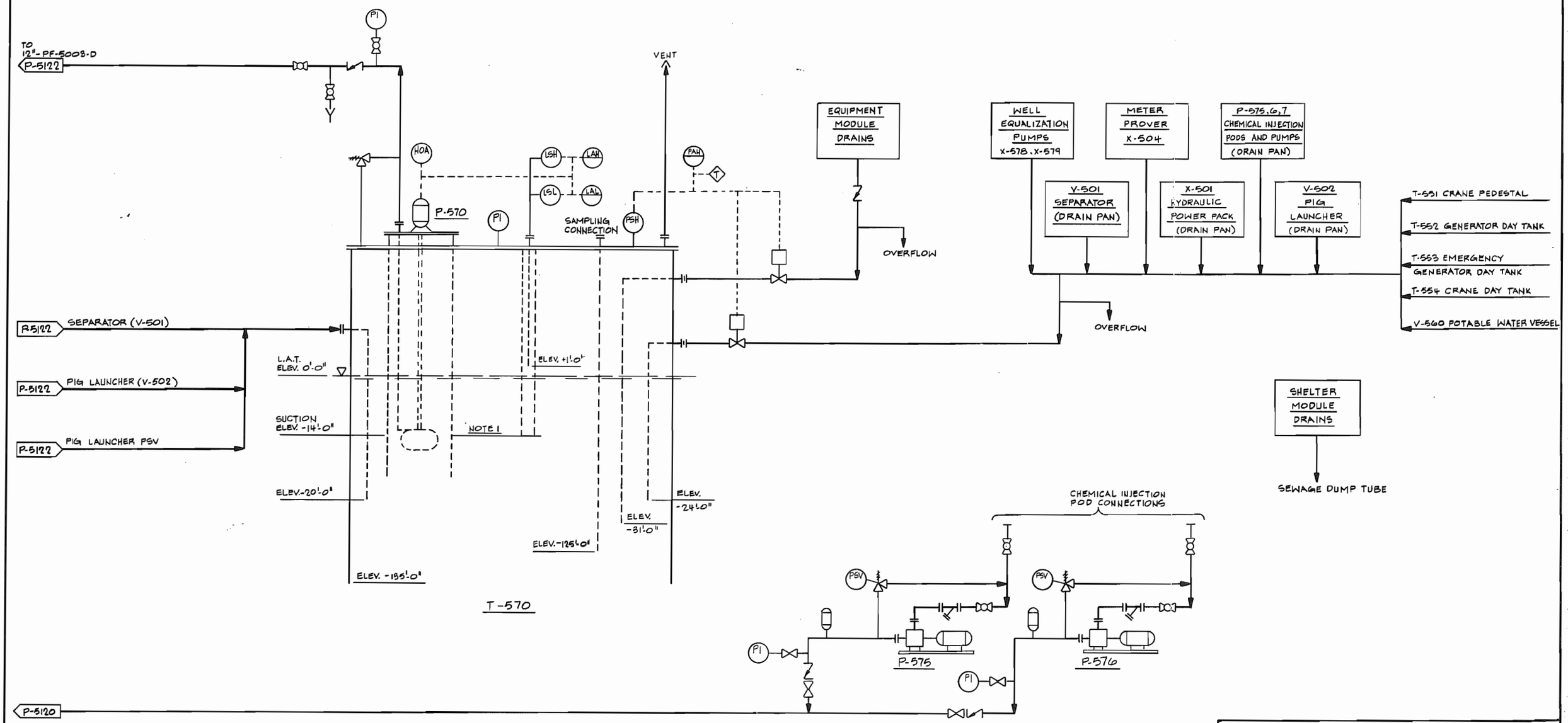

NOTES:

1. PUMP AND INSTRUMENT CAISSONS TO BE SLOTTED FROM ELEVATION +10'-0" TO -10'-0". VENT HOLE PROVIDED AT TOP OF PUMP CAISSON.
2. ALL DRAINS FROM SHELTER TO SEWAGE DUMP TUBE.

THIS DRAWING IS THE PROPERTY OF AND EMBODIES CONFIDENTIAL INFORMATION OF AMOCO NORWAY OIL COMPANY. THE DRAWING AND THE INFORMATION THEREON SHALL NOT BE REPRODUCED OR DISCLOSED TO ANY OTHER PARTY OR USED FOR ANY PURPOSE OTHER THAN FOR THE BENEFIT OF AND AS AUTHORIZED BY AMOCO NORWAY OIL COMPANY.

NO.	DESCRIPTION	DR/CK	AP	AP	DATE
	REVISION				

APPROP. NO. 556 (HOD)

APPROVED FOR CONSTRUCTION
BY _____ DATE _____
PROCESS BY _____ MECHANICAL BY _____

Amoco Norway Oil Company

PIPING & INSTRUMENT DIAGRAM
DRAIN SYSTEMS AND
CHEMICAL INJECTION
HOD PLATFORM

DR	DATE	CK	DATE	AP	DATE	SCALE	FILE NO	DWG. NO	REV
TEC	9-14-87					N.A.		P-5142	1

EXHIBIT 5.8

	CONTACTOR
	CONTACTOR WITH PROTECTION DEVICES
	ISOLATOR
	CONTACT, GENERAL SYMBOL
	CONTACT, DELAYED MAKE
	CONTACT, DELAYED BREAK
	CONTACT, DELAYED MAKE AND BREAK
	FUSE
	AUTOMATIC FUSE
ONE-LINE / MULTI-LINE	
	GENERAL SYMBOL, CIRCUITBREAKER TO BE USED WHEN PROTECTION DEVICES ARE NOT SPECIFIED.
I> / I> I> I>	CIRCUITBREAKER WITH BUILT-IN THERMAL AND MAGNETIC OVERCURRENT TRIP
U< / U< U< U<	CIRCUITBREAKER WITH BUILT-IN UNDERVOLTAGE TRIP
I / I I I	CIRCUITBREAKER WITH BUILT-IN EARTHFAULT TRIP
	LIMIT SWITCH, BREAK CONTACT
	AUTO TRANSFORMER
	PLUG-IN UNIT
	LINK
	ELECTROMAGNETIC RELAY
	TIME DELAYED ELECTROMECHANICAL OPERATION, DELAYED DROP-OUT
	TIME DELAYED ELECTROMECHANICAL OPERATION, DELAYED PICK-UP

	THERMAL OVERCURRENT DETECTION
	ELECTROMAGNETIC O.C. DETECTION
	VOLTAGE TRANSFORMER, ONE-LINE
	POWER TRANSFORMER, ONE-LINE
	POWER TRANSFORMER AND VOLTAGE TRANSFORMER, MULTILINE
	CURRENT TRANSFORMER, MULTILINE
	CURRENT TRANSFORMER, ONE LINE
	CURRENT TRANSFORMER, TWO SECONDARY WINDINGS ON SEPARATE CORES, ONE LINE
	CURRENT TRANSFORMER, TWO SECONDARY WINDINGS ON ONE CORE, ONE LINE
	EARTH
	CHARGER
	INVERTER
	BATTERY
	STATIC SWITCH
G / M	GENERATOR, MOTOR
	PROTECTIVE RELAY, GENERAL SYMBOL
	TERMINAL IN MOTORSTARTER
	MECHANICAL INTERLOCK
	MECHANICAL COUPLING
	UNI-DIRECTIONAL BLOCKING DEVICE, UNBLOCKED
	UNI-DIRECTIONAL BLOCKING DEVICE, BLOCKED
	AUTOMATIC RESET
	MANUALLY OPERATED CONTROL
	TRANSITION BETWEEN CABLE AND BUSBAR

THIS DRAWING IS THE PROPERTY OF AND EMBODIES CONFIDENTIAL INFORMATION OF AMOCO NORWAY OIL COMPANY. THE DRAWING AND THE INFORMATION THEREON SHALL NOT BE REPRODUCED OR DISCLOSED TO ANY OTHER PARTY OR USED FOR ANY PURPOSE OTHER THAN FOR THE BENEFIT OF AND AS AUTHORIZED BY AMOCO NORWAY OIL COMPANY.

NO.	DESCRIPTION	DR	CK	AP	AP	DATE
	REVISION					

APPROP. NO. 556 (HOD)

APPROVED FOR CONSTRUCTION
BY_____ DATE_____

PROCESS BY_____ MECHANICAL BY_____

DR	DATE	CK	DATE	AP	DATE
E.	10-7-1				

Amoco Norway Oil Company

LEGEND - ELECTRICAL

HOL PLATFORM

SCALE	FILE NO	DWG NO	REV
N.A.		F-5114	0

EXHIBIT 5.9

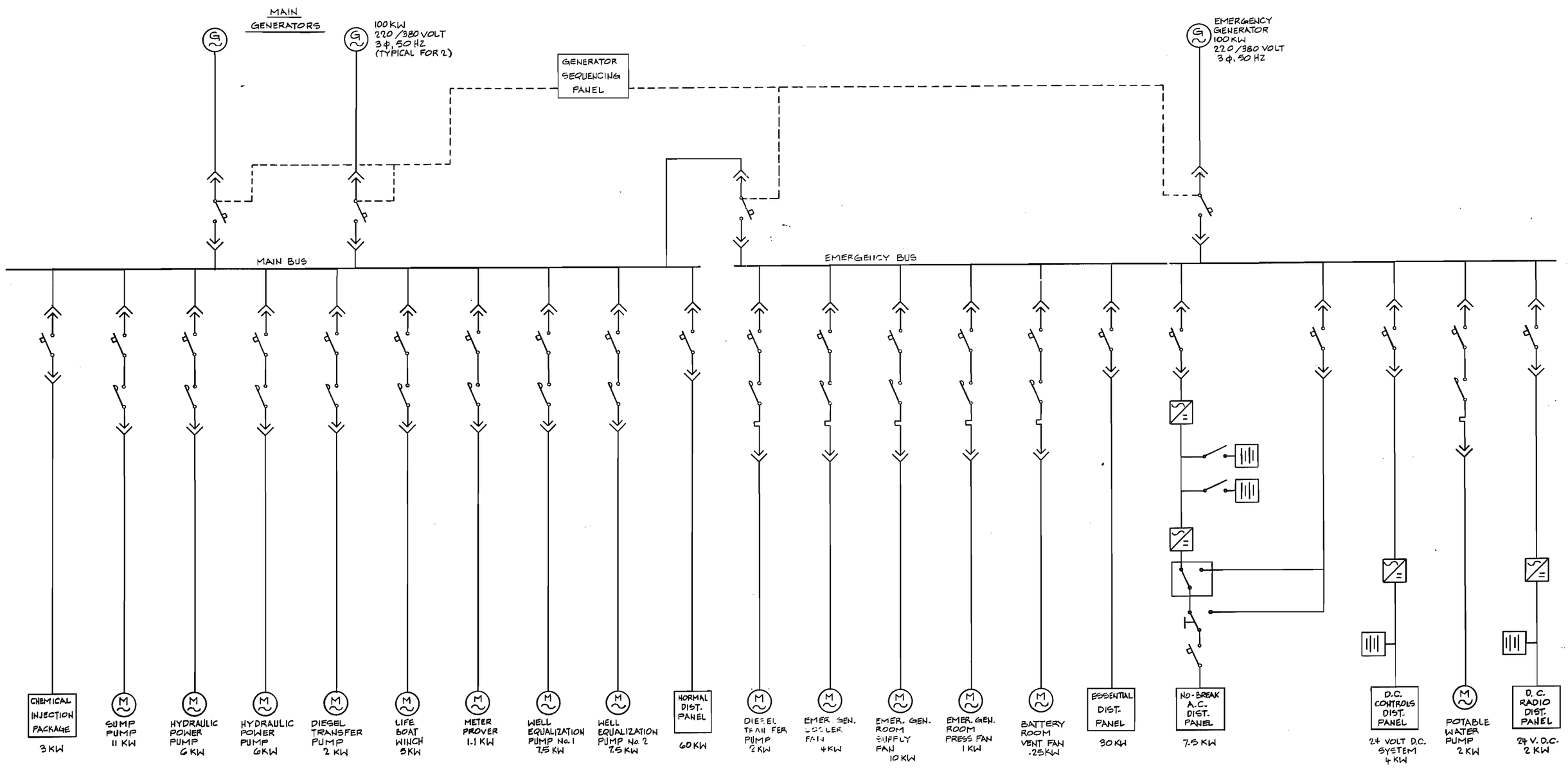

THIS DRAWING IS THE PROPERTY OF AND EMBODIES CONFIDENTIAL INFORMATION OF AMOCO NORWAY OIL COMPANY. THE DRAWING AND THE INFORMATION THEREON SHALL NOT BE REPRODUCED OR DISCLOSED TO ANY OTHER PARTY OR USED FOR ANY PURPOSE OTHER THAN FOR THE BENEFIT OF AND AS AUTHORIZED BY AMOCO NORWAY OIL COMPANY.

NO.	DESCRIPTION	DR	CK	AP	AP	DATE
	REVISION					

APPROP. NO. 556 (HOD)

APPROVED FOR CONSTRUCTION
BY _____ DATE _____

PROCESS		MECHANICAL	
BY		BY	

DR	DATE	CK	DATE	AP	DATE
TEC	9-15-87				

Amoco Norway Oil Company

SIMPLIFIED ONE LINE DIAGRAM ~ ELECTRICAL DISTRIBUTION SYSTEM HOD PLATFORM

SCALE	FILE NO	DWG NO	REV
N.A.		P-5200	0

EXHIBIT 5.10

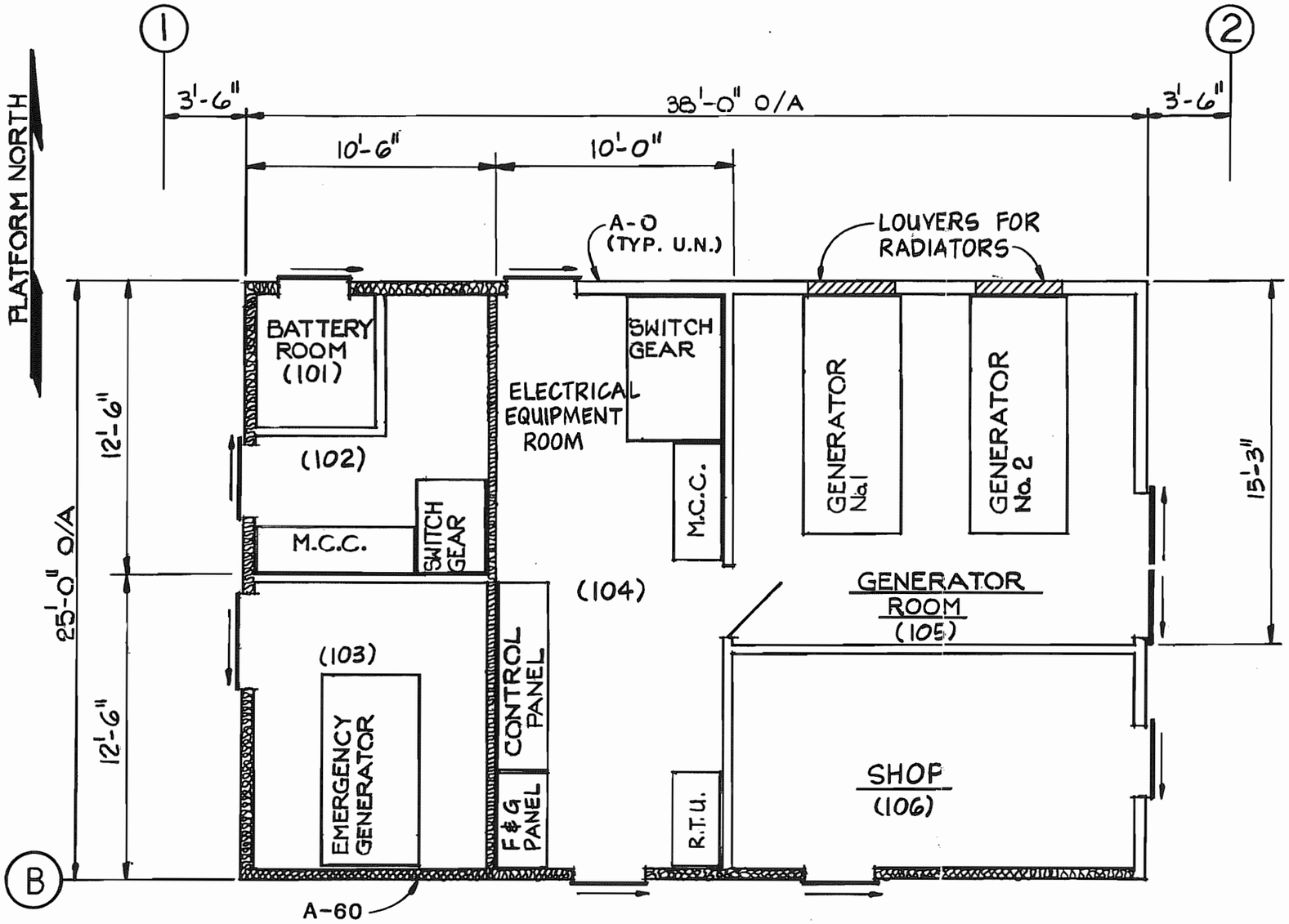

EQUIPMENT MODULE

SCALE : 3/16"=1'-0"

DESCRIPTION	
ROOM NO	ROOM
101	BATTERY ROOM
102	EMER. MCC & SWITCH GEAR ROOM
103	EMERGENCY GENERATOR ROOM
104	ELECTRICAL EQUIPMENT ROOM
105	GENERATOR ROOM
106	SHOP

NOTES: 1) ROOMS 101, 102, AND 103 ARE ENCLOSED WITHIN A-60 WALLS, ROOF AND FLOOR.

2) ENTIRE SOUTH WALL OF EQUIPMENT BUILDING RATED A-60. ALL OTHER WALLS, ROOF, AND FLOOR OF ROOMS 104, 105 AND 106 RATED A-0.

3) ALL EXTERIOR DOORS TO BE SLIDING TYPE.

CONCEPTUAL DESIGN

THIS DRAWING IS THE PROPERTY OF AND EMBODIES CONFIDENTIAL INFORMATION OF AMOCO NORWAY OIL COMPANY. THE DRAWING AND THE INFORMATION THEREON SHALL NOT BE REPRODUCED OR DISCLOSED TO ANY OTHER PARTY OR USED FOR ANY PURPOSE OTHER THAN FOR THE BENEFIT OF AND AS AUTHORIZED BY AMOCO NORWAY OIL COMPANY.

NO.	DESCRIPTION	DR/CK	AP	AP	DATE
1	CONCEPTUAL DESIGN				

REVISION

APPROP. NO. PC 556

APPROVED FOR CONSTRUCTION

BY_____ DATE_____

PROCESS BY_____ MECHANICAL BY_____

DR	DATE	CK	DATE	AP	DATE

Amoco Norway Oil Company

EQUIPMENT MODULE BUILDING LAYOUT HOD PLATFORM

SCALE	FILE NO	DWG NO	REV
		P-5010	1

EXHIBIT 5.11

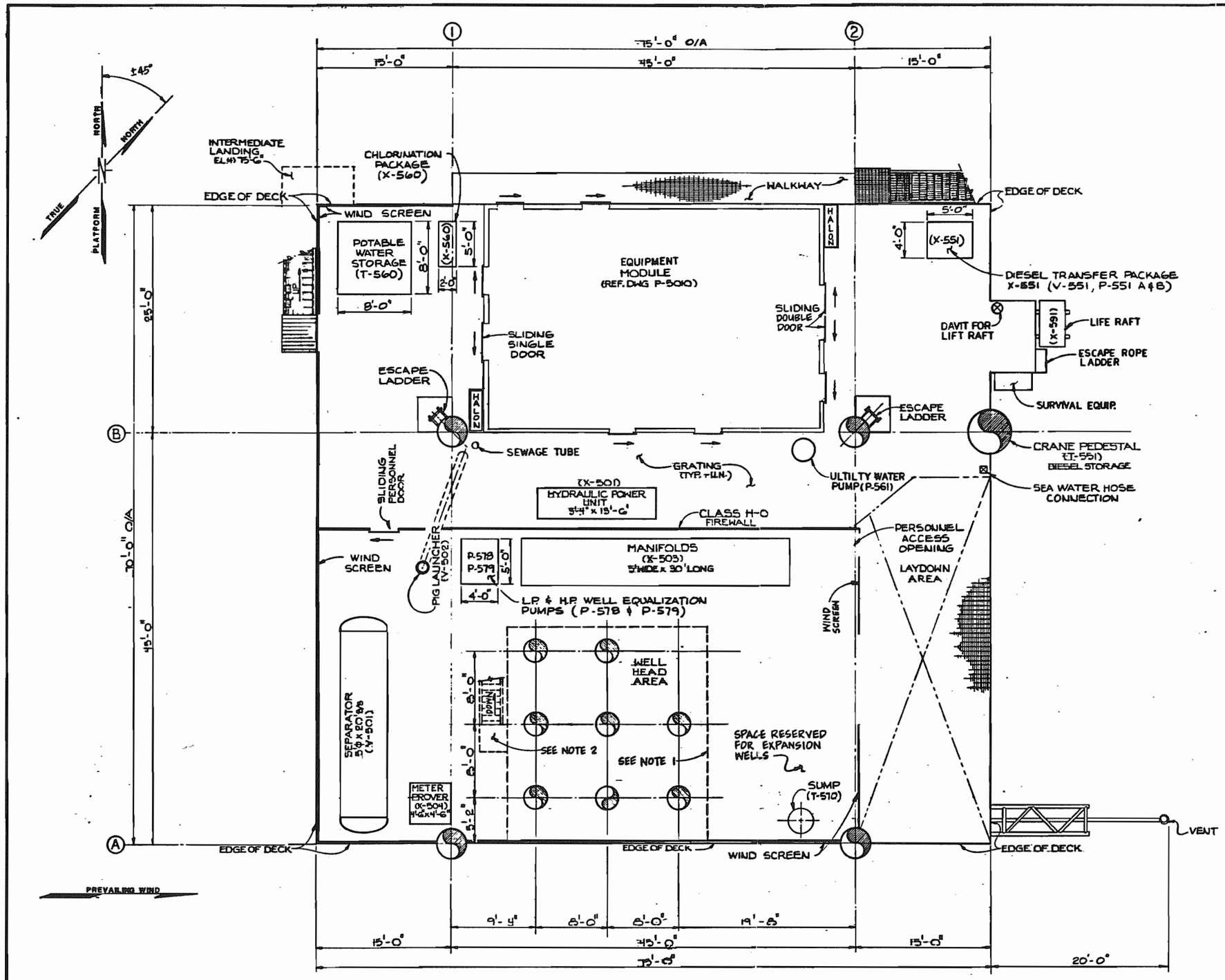

CELLAR DECK LAYOUT
T.O.S. EL (+) 65'-6"
SCALE: 3/16" = 1'-0"

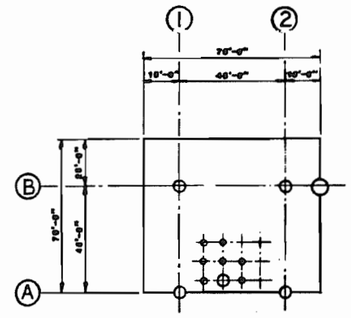

KEY PLAN
SCALE: 1" 25'-0"

EQUIP. NO.	DESCRIPTION
V-501	SEPARATOR
V-502	PIG LAUNCHER
T-570	SUMP CAISSON
P-570	SUMP PUMP
X-501	HYDRAULIC POWER UNIT
G-551	DIESEL ENGINE GENERATOR SET
G-553	EMERGENCY GENERATOR
X-553	BATTERY PACK
T-551	DIESEL STORAGE TANK
X-551	DIESEL TRANSFER PACKAGE
P-561	UTILITY WATER PUMP
X-591	20 MAN LIFE RAFT
X-560	CHLORINATION PACKAGE
X-504	METER PROVER
P-560	POTABLE WATER SUPPLY PUMP
P-551A	DIESEL TRANSFER PUMP
P-551B	DIESEL TRANSFER PUMP
G-552	DIESEL ENGINE GENERATOR SET
T-560	POTABLE WATER STORAGE
P-578	L.P. WELL EQUALIZATION PUMP
P-579	H.P. WELL EQUALIZATION PUMP

NOTES: 1. ACCESS PLATFORM AROUND WELLHEADS AT ELEV. (+) 73'-6".
2. STAIRWAY FROM CELLAR DECK TO ACCESS PLATFORM

JAN 13 1988

CONCEPTUAL DESIGN

THIS DRAWING IS THE PROPERTY OF AND EMBODIES CONFIDENTIAL INFORMATION OF AMOCO NORWAY OIL COMPANY. THE DRAWING AND THE INFORMATION THEREON SHALL NOT BE REPRODUCED OR DISCLOSED TO ANY OTHER PARTY OR USED FOR ANY PURPOSE OTHER THAN FOR THE BENEFIT OF AND AS AUTHORIZED BY AMOCO NORWAY OIL COMPANY.

NO.	DESCRIPTION	DR	CK	AP	AP	DATE
1	CONCEPTUAL DESIGN					
2	AS PER AMOCO NORWAY COMMENTS					

REVISION

APPROP. NO. PC 556

APPROVED FOR CONSTRUCTION
BY ____ DATE ____
PROCESS BY ____ MECHANICAL BY ____

DR	DATE	CK	DATE	AP	DATE
B J	1-13-87				

Amoco Norway Oil Company

CELLAR DECK
HOD PLATFORM

SCALE	FILE NO	DWG NO	REV
		P-5090	2

EXHIBIT 5.12

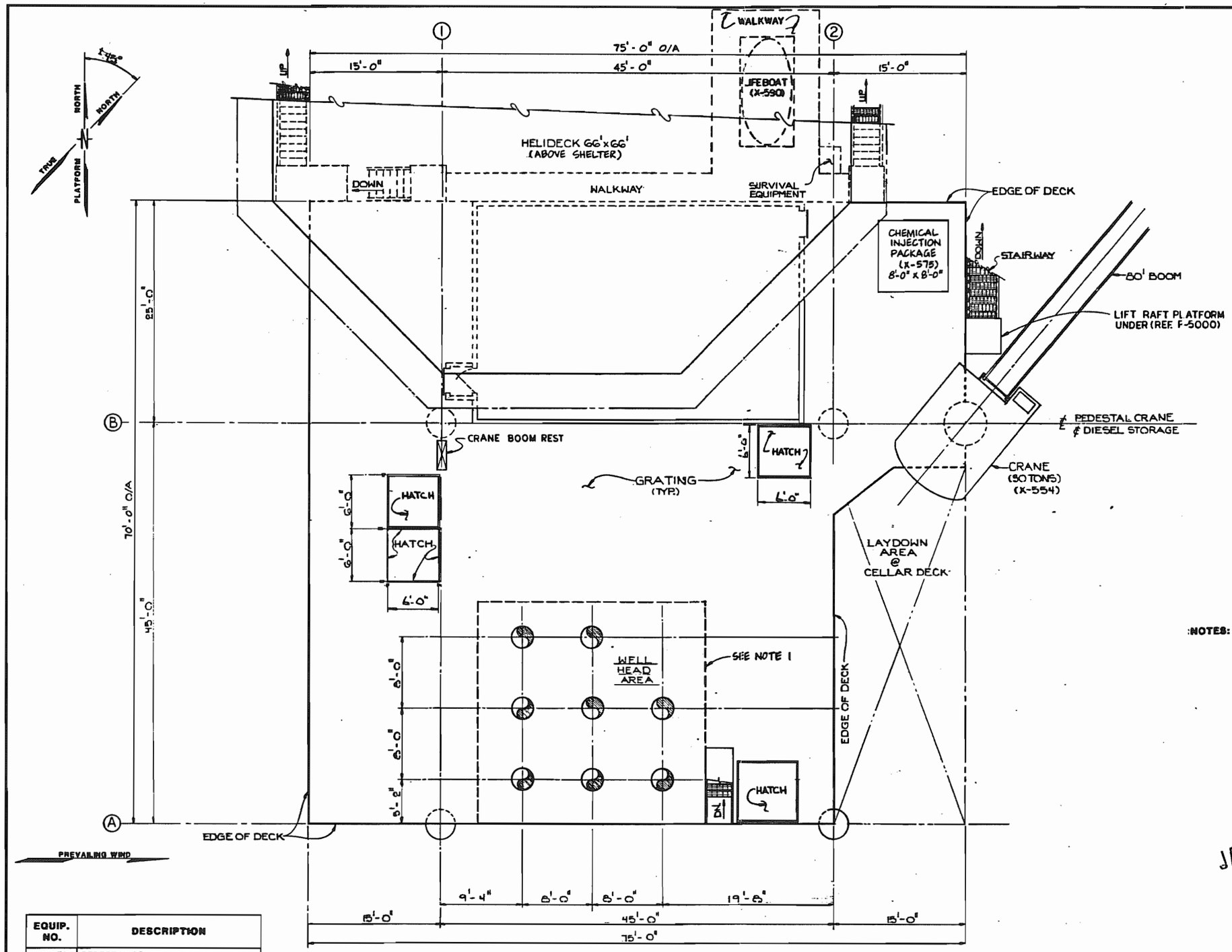

MAIN DECK LAYOUT
T.O.S. EL. (+) 85'-6"
SCALE: 1/16" = 1'-0"

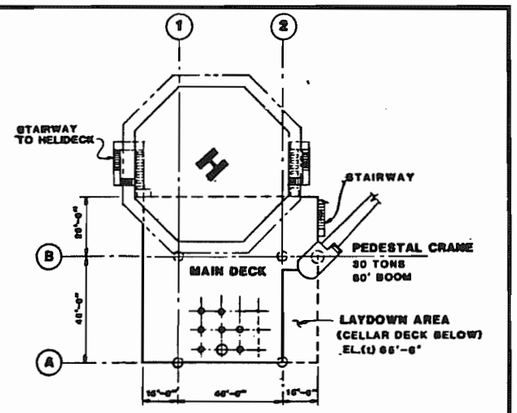

KEY PLAN
SCALE: 1" = 30'-0"

NOTES:
1. ACCESS PLATFORM AROUND WELLHEADS BELOW MAIN DECK AT ELEV. (+) 75'-6".
2. STAIRWAY FROM MAIN DECK TO ACCESS PLATFORM
3. ONE HATCH ABOVE PIG LAUNCHER; ONE HATCH FOR CRANE ACCESS TO CELLAR DECK

JAN 13 1988

CONCEPTUAL DESIGN

EQUIP. NO.	DESCRIPTION
X-554	PEDESTAL CRANE
X-575	CHEMICAL INJECTION UNIT
X-590	RESCUE-LIFEBOAT

THIS DRAWING IS THE PROPERTY OF AND EMBODIES CONFIDENTIAL INFORMATION OF AMOCO NORWAY OIL COMPANY. THE DRAWING AND THE INFORMATION THEREON SHALL NOT BE REPRODUCED OR DISCLOSED TO ANY OTHER PARTY OR USED FOR ANY PURPOSE OTHER THAN FOR THE BENEFIT OF AND AS AUTHORIZED BY AMOCO NORWAY OIL COMPANY

NO.	DESCRIPTION (REVISION)	DR	CK	AP	AP	DATE
1	CONCEPTUAL DESIGN					
2	AS PER AMOCO NORWAY COMMENTS					

APPROP. NO. PC 556

APPROVED FOR CONSTRUCTION
BY _____ DATE _____

PROCESS		MECHANICAL	
BY		BY	

DR	DATE	CK	DATE	AP	DATE
B J	1-13-87				

Amoco Norway Oil Company

MAIN DECK
HOD PLATFORM

SCALE	FILE NO	DWG NO	REV
		P-5002	2

EXHIBIT 5.13

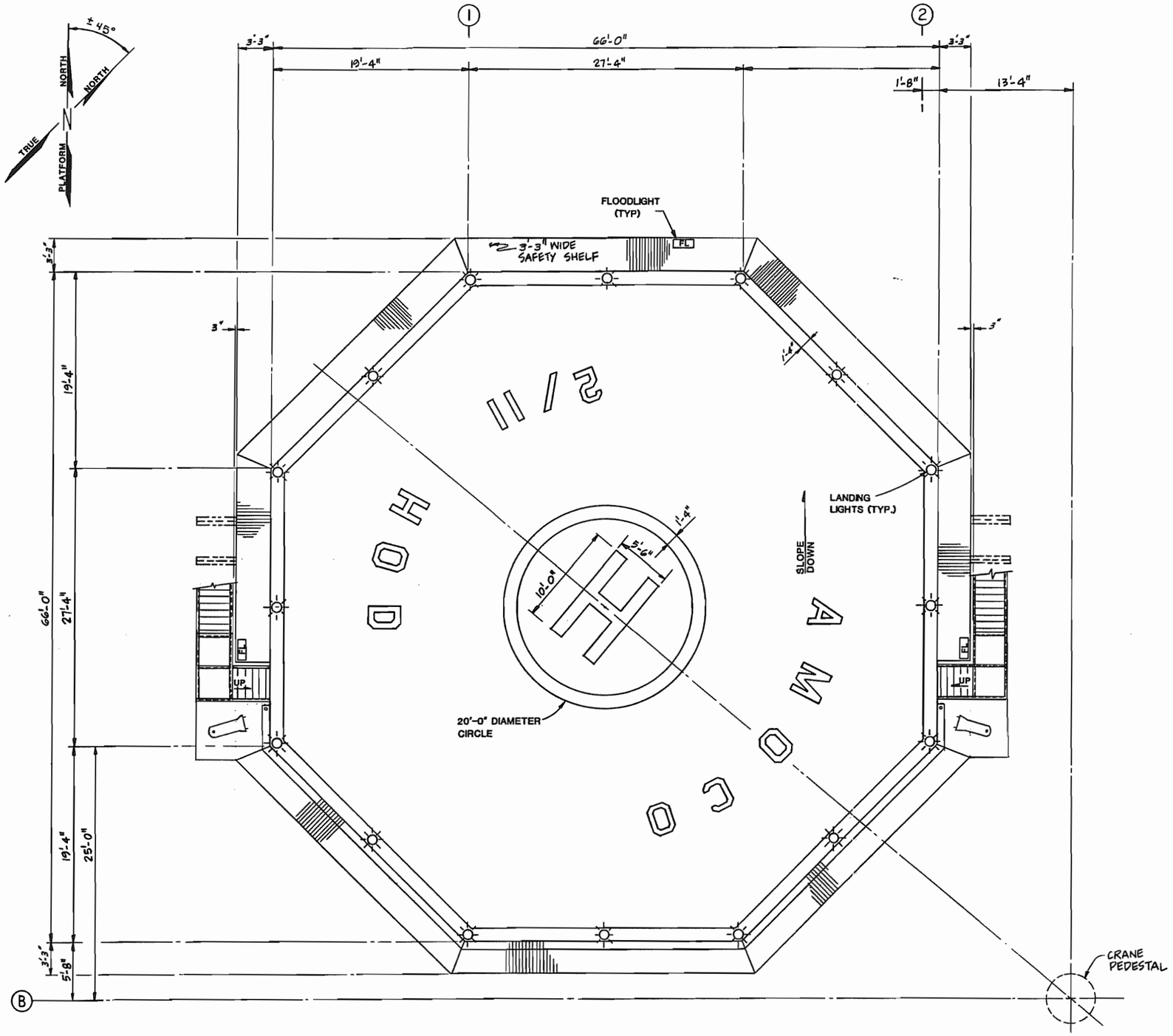

HELIDECK PLAN

T.O.S. EL. (+) 108'-10"
SCALE: 3/16" = 1'-0"

NOTES:

1. BLUE AND WHITE LANDING LIGHTS SPACED ALTERNATELY AROUND HELIDECK AS INDICATED
2. HELIDECK TO BE PAINTED GRAY, HELICOPTER SYMBOL AND CIRCLE YELLOW. "AMOCO" AND "2/11 HOD" TO BE WHITE.
3. WIND SOCK MOUNTED ON CRANE GANTRY OR CENTER POST.
4. CRANE GANTRY OR POST WILL BE LOCATED GREATER THAN 1/3 ROTOR DIAMETER FROM THE PERIPHERY OF THE HELIDECK.
5. THREE FLOODLIGHTS ARE REQUIRED, SHOWN THUSLY [FL].

CONCEPTUAL DESIGN

THIS DRAWING IS THE PROPERTY OF AND EMBODIES CONFIDENTIAL INFORMATION OF AMOCO NORWAY OIL COMPANY. THE DRAWING AND THE INFORMATION THEREON SHALL NOT BE REPRODUCED OR DISCLOSED TO ANY OTHER PARTY OR USED FOR ANY PURPOSE OTHER THAN FOR THE BENEFIT OF AND AS AUTHORIZED BY AMOCO NORWAY OIL COMPANY.

NO.	DESCRIPTION	DR	CK	AP	AP	DATE
1	CONCEPTUAL DESIGN					

REVISION

APPROP. NO. PC 556

APPROVED FOR CONSTRUCTION
BY_____ DATE_____

PROCESS		MECHANICAL	
BY_____		BY_____	

DR	DATE	CK	DATE	AP	DATE

Amoco Norway Oil Company

HELIDECK PLAN
HOD PLATFORM

SCALE	FILE NO.	DWG NO.	REV
		P-5014	1

EXHIBIT 5.14

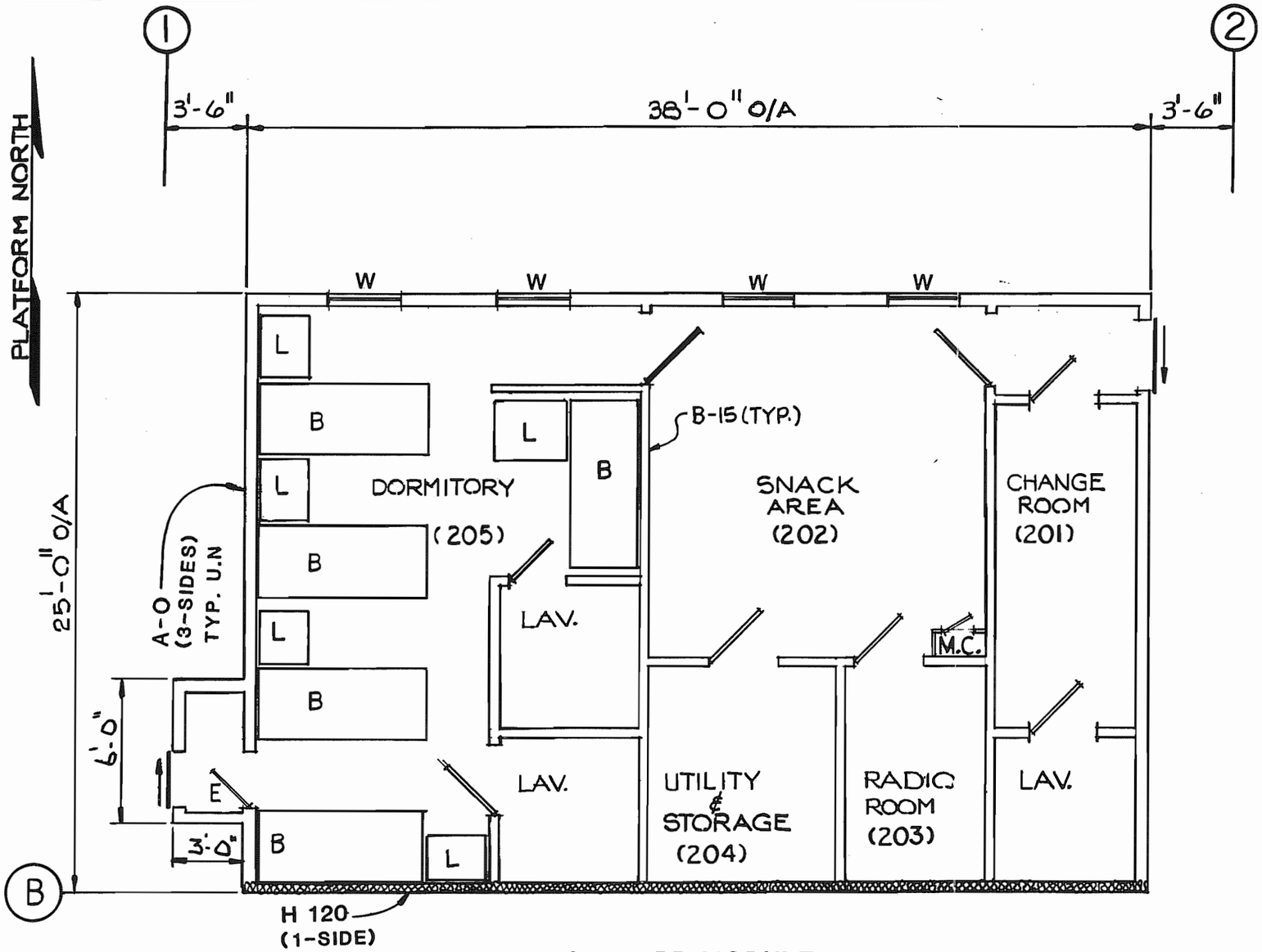

SHELTER MODULE

SCALE : 3/16" = 1'-0"

DESCRIPTION			
ROOM NO.	ROOM	AREA FT²	AREA M²
201	CHANGE AREA	120	11.1
202	SNACK AREA	240	22.3
203	RADIO ROOM	56	5.2
204	UTILITY	64	6.0
205	DORMITORY	384	35.7
—	HALLWAY	24	2.2
		888	82.4

LEGEND

B	BED
L	LOCKER
MC	MEDICAL CABINET
LAV	LAVATORY UNIT
W	WINDOW
E	EMERGENCY DOOR

FLOOR A 60 RATING
ROOF H 120 RATING
EXTERIOR WALLS AS NOTED
INTERIOR WALLS B-15 RATING

CONCEPTUAL DESIGN

THIS DRAWING IS THE PROPERTY OF AND EMBODIES CONFIDENTIAL INFORMATION OF AMOCO NORWAY OIL COMPANY. THE DRAWING AND THE INFORMATION THEREON SHALL NOT BE REPRODUCED OR DISCLOSED TO ANY OTHER PARTY OR USED FOR ANY PURPOSE OTHER THAN FOR THE BENEFIT OF AND AS AUTHORIZED BY AMOCO NORWAY OIL COMPANY.

NO.	DESCRIPTION	DR/CK	AP	AP	DATE
2	CONCEPTUAL DESIGN				

REVISION

APPROP. NO. PC 556

APPROVED FOR CONSTRUCTION
BY_____ DATE_____

PROCESS BY_____ MECHANICAL BY_____

DR	DATE	CK	DATE	AP	DATE

Amoco Norway Oil Company

SHELTER MODULE
BUILDING LAYOUT
HOD PLATFORM

SCALE	FILE NO	DWG NO	R
		P-5012	2

EXHIBIT 5.15

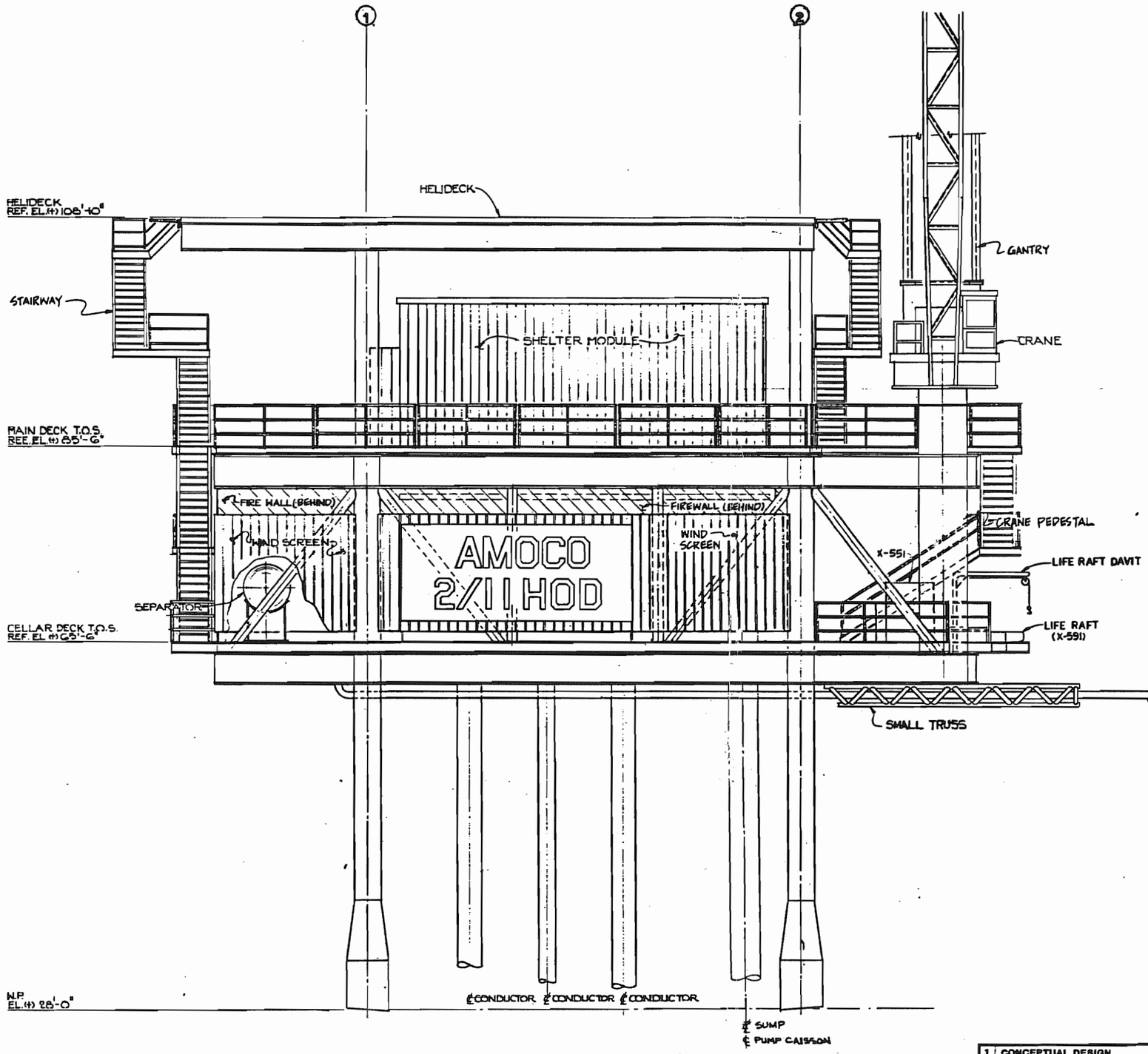

ELEVATION ROW "A"
SCALE: 1/16" = 1'-0"

JAN 13 1988

CONCEPTUAL DESIGN

NO.	DESCRIPTION	DR	CK	AP	AP	DATE
1	CONCEPTUAL DESIGN					
2	AS PER AMOCO NORWAY COMMENTS					

REVISION

THIS DRAWING IS THE PROPERTY OF AND EMBODIES CONFIDENTIAL INFORMATION OF AMOCO NORWAY OIL COMPANY. THE DRAWING AND THE INFORMATION THEREON SHALL NOT BE REPRODUCED OR DISCLOSED TO ANY OTHER PARTY OR USED FOR ANY PURPOSE OTHER THAN FOR THE BENEFIT OF AND AS AUTHORIZED BY AMOCO NORWAY OIL COMPANY.

APPROP. NO. PC-556

APPROVED FOR CONSTRUCTION
BY _____ DATE _____
PROCESS BY _____
MECHANICAL BY _____

Amoco Norway Oil Company

ELEVATION ROW "A"
HOD PLATFORM

DR	DATE	CK	DATE	AP	DATE	SCALE	FILE NO	DWG. NO	REV
BJ	H3-87							P-5004	2

EXHIBIT 5.16

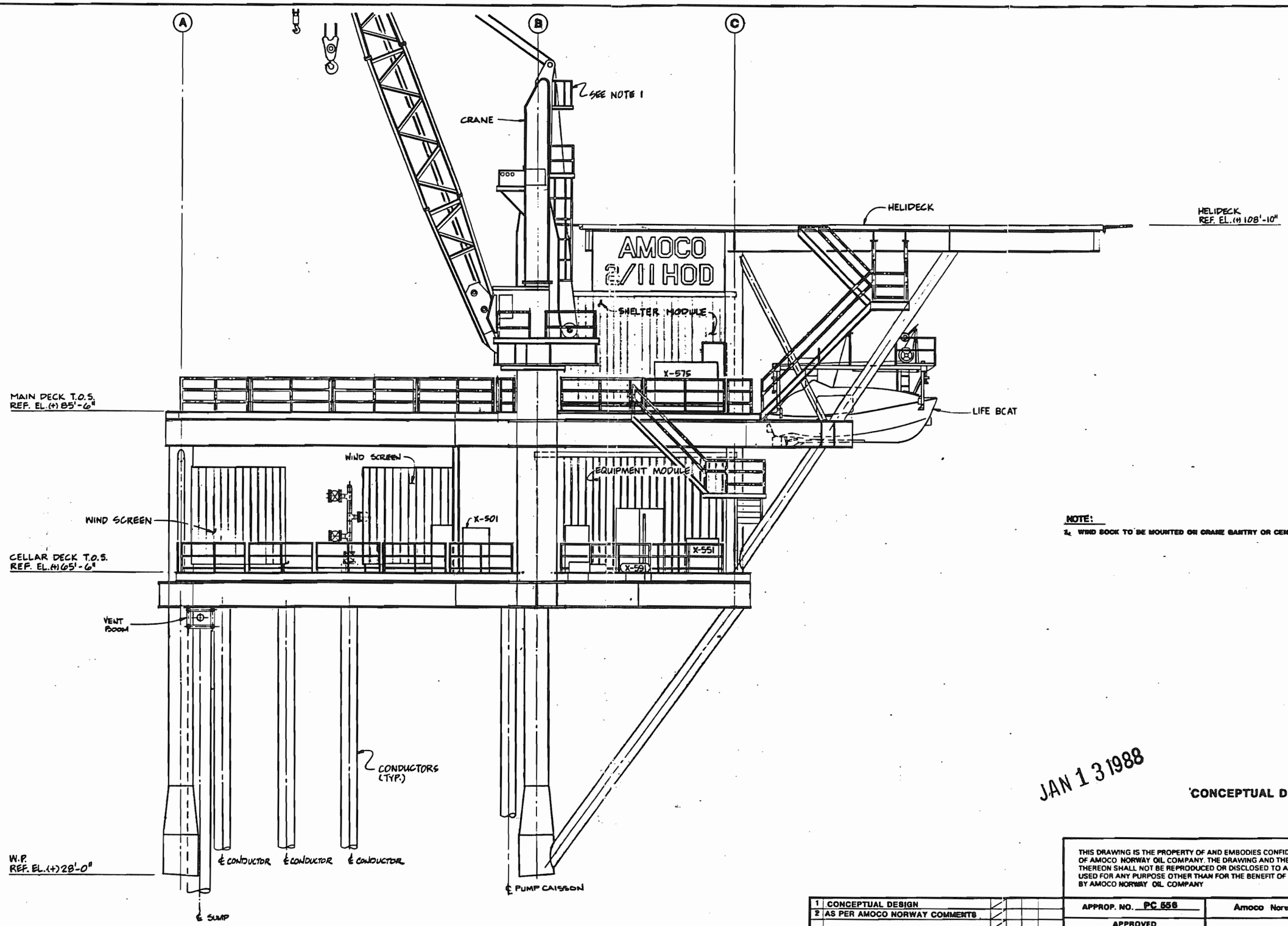

ELEVATION ROW "2"

SCALE 3/16"=1'-0"

NOTE:

1. WIND SOCK TO BE MOUNTED ON CRANE GANTRY OR CENTER POST.

JAN 13 1988

CONCEPTUAL DESIGN

THIS DRAWING IS THE PROPERTY OF AND EMBODIES CONFIDENTIAL INFORMATION OF AMOCO NORWAY OIL COMPANY. THE DRAWING AND THE INFORMATION THEREON SHALL NOT BE REPRODUCED OR DISCLOSED TO ANY OTHER PARTY OR USED FOR ANY PURPOSE OTHER THAN FOR THE BENEFIT OF AND AS AUTHORIZED BY AMOCO NORWAY OIL COMPANY

NO.	DESCRIPTION	DR.	CK.	AP	AP	DATE
1	CONCEPTUAL DESIGN					
2	AS PER AMOCO NORWAY COMMENTS					

REVISION

APPROP. NO. PC 556

APPROVED FOR CONSTRUCTION

BY _____ DATE _____

PROCESS BY _____ MECHANICAL BY _____

DR.	DATE	CK.	DATE	AP	DATE
B J	1-13-87				

Amoco Norway Oil Company

ELEVATION ROW "2"
HOD PLATFORM

SCALE	FILE NO	DWG NO	REV
		P-5006	2

EXHIBIT 5.17

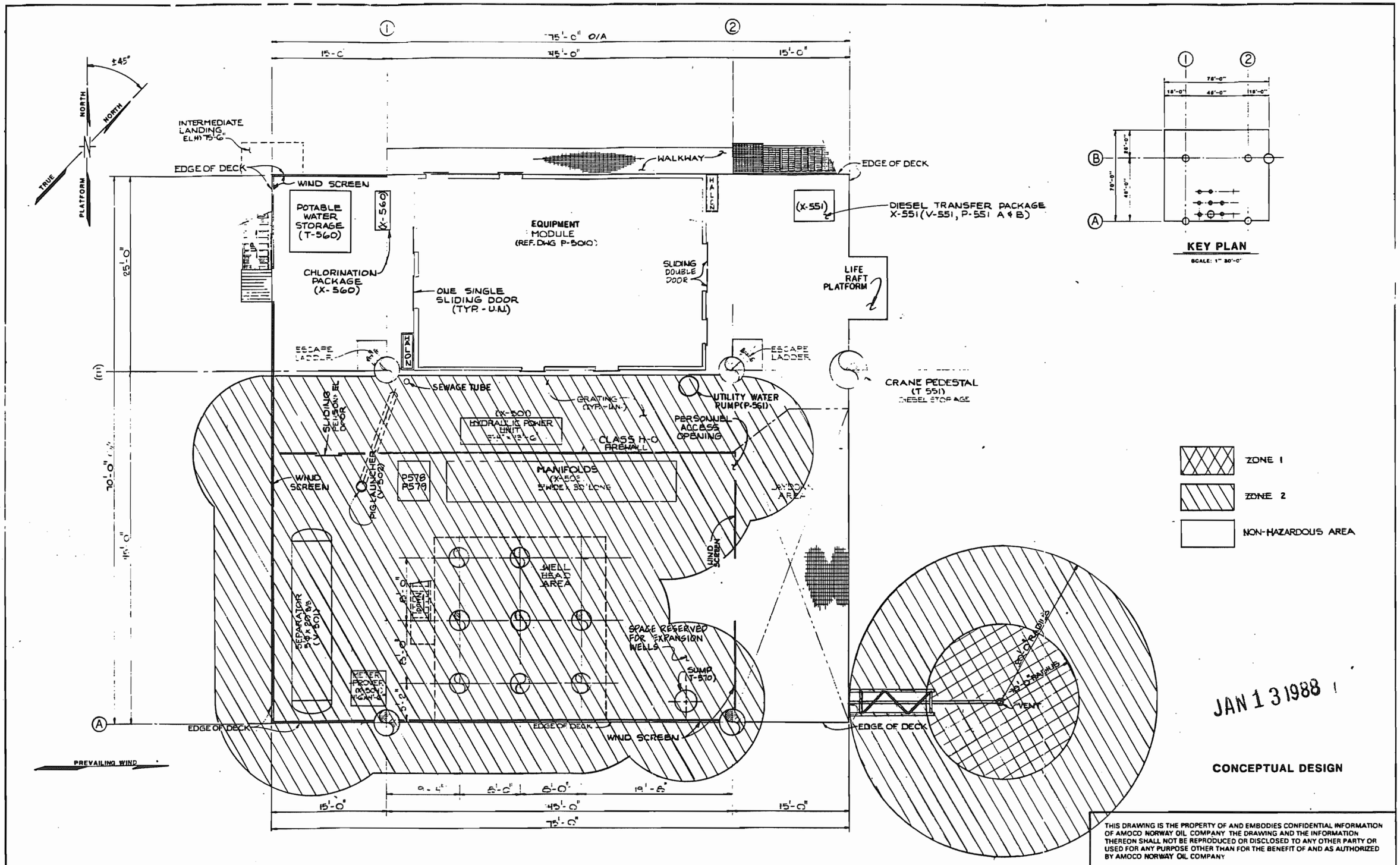

CELLAR DECK LAYOUT
I.O.S. EL.(+) 65'-0"
SCALE: 3/16" = 1'-0"

THIS DRAWING IS THE PROPERTY OF AND EMBODIES CONFIDENTIAL INFORMATION OF AMOCO NORWAY OIL COMPANY. THE DRAWING AND THE INFORMATION THEREON SHALL NOT BE REPRODUCED OR DISCLOSED TO ANY OTHER PARTY OR USED FOR ANY PURPOSE OTHER THAN FOR THE BENEFIT OF AND AS AUTHORIZED BY AMOCO NORWAY OIL COMPANY

NO.	DESCRIPTION / REVISION	DR	CK	AP	DATE
1	CONCEPTUAL DESIGN				
2	AS PER AMOCO NORWAY COMMENTS				

APPROP. NO. PC 556

APPROVED FOR CONSTRUCTION
BY _____ DATE _____
PROCESS BY _____ MECHANICAL BY _____

DR B. J. 1-13-87 | CK | DATE | AP | DATE

Amoco Norway Oil Company

AREA CLASSIFICATION CELLAR DECK HOD PLATFORM

SCALE | FILE NO. | DWG NO. P-5050 | REV. 2

EXHIBIT 5.18

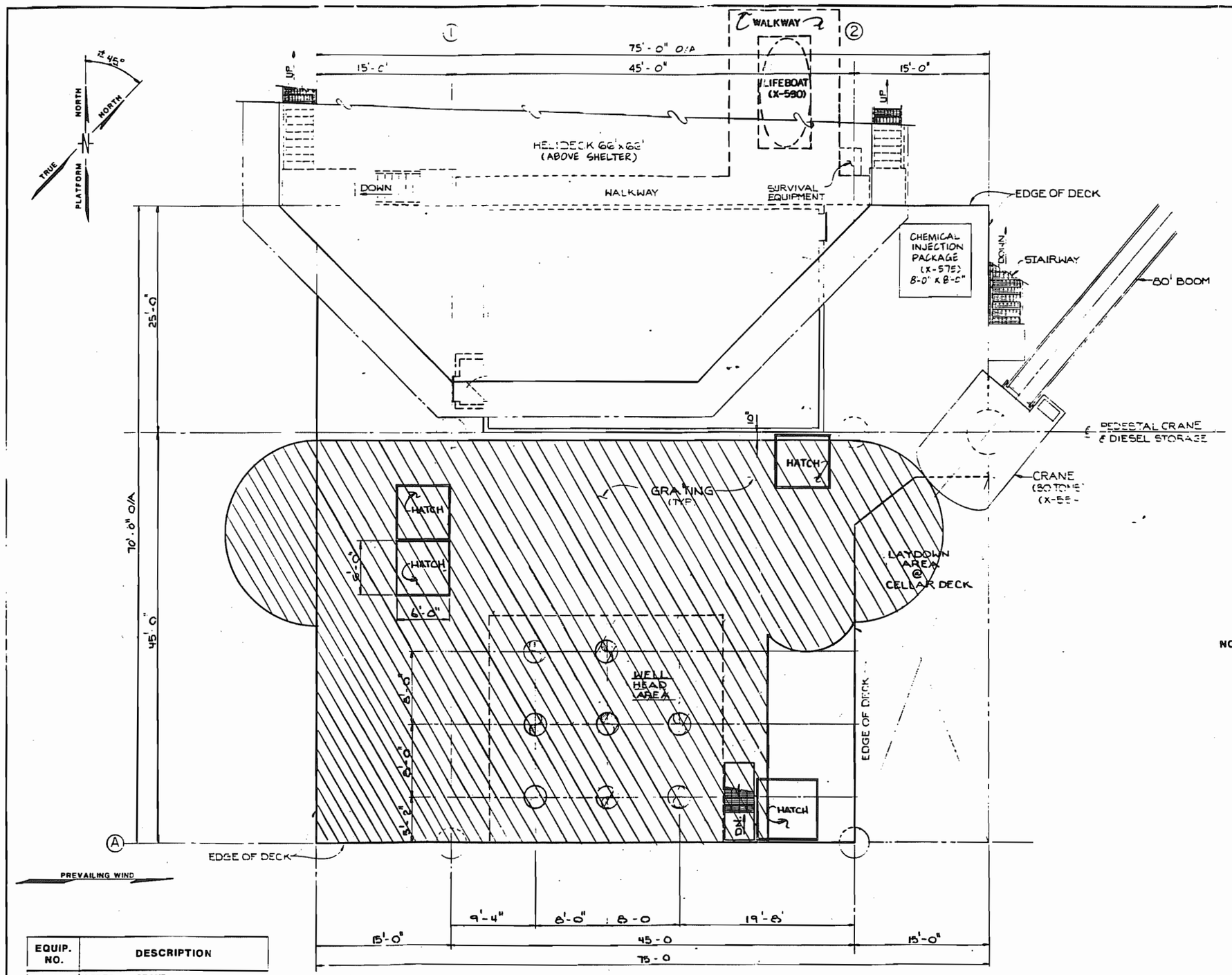

MAIN DECK LAYOUT
T.O.S. EL. (+) 65'-6"
SCALE: 1/16" = 1'-0"

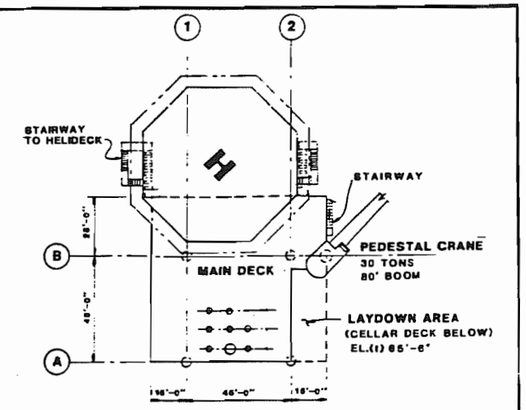

KEY PLAN
SCALE: 1" = 30'-0"

LEGEND

- ZONE 1
- ZONE 2
- NON HAZARDOUS AREA

NOTES: 1. ZONE 2 AREA EXTENDS 10'-0" ABOVE TOP OF WELLHEAD EQUIPMENT

JAN 13 1988

CONCEPTUAL DESIGN

EQUIP. NO.	DESCRIPTION
X-554	PEDESTAL CRANE
X-575	CHEMICAL INJECTION UNIT
X-590	RESCUE-LIFEBOAT

THIS DRAWING IS THE PROPERTY OF AND EMBODIES CONFIDENTIAL INFORMATION OF AMOCO NORWAY OIL COMPANY. THE DRAWING AND THE INFORMATION THEREON SHALL NOT BE REPRODUCED OR DISCLOSED TO ANY OTHER PARTY OR USED FOR ANY PURPOSE OTHER THAN FOR THE BENEFIT OF AND AS AUTHORIZED BY AMOCO NORWAY OIL COMPANY.

NO	DESCRIPTION	BY	CK	AP	DATE
1	CONCEPTUAL DESIGN				
2	AS PER AMOCO NORWAY COMMENTS				

REVISIONS

APPROP. NO. PC 556

APPROVED FOR CONSTRUCTION
BY ____ DATE ____
PROCESS BY ____ MECHANICAL BY ____

B. J. 1-13-87

Amoco Norway Oil Company

AREA CLASSIFICATION
MAIN DECK
HOD PLATFORM

DWG. NO. P-5052 REV. 2

EXHIBIT 5.19

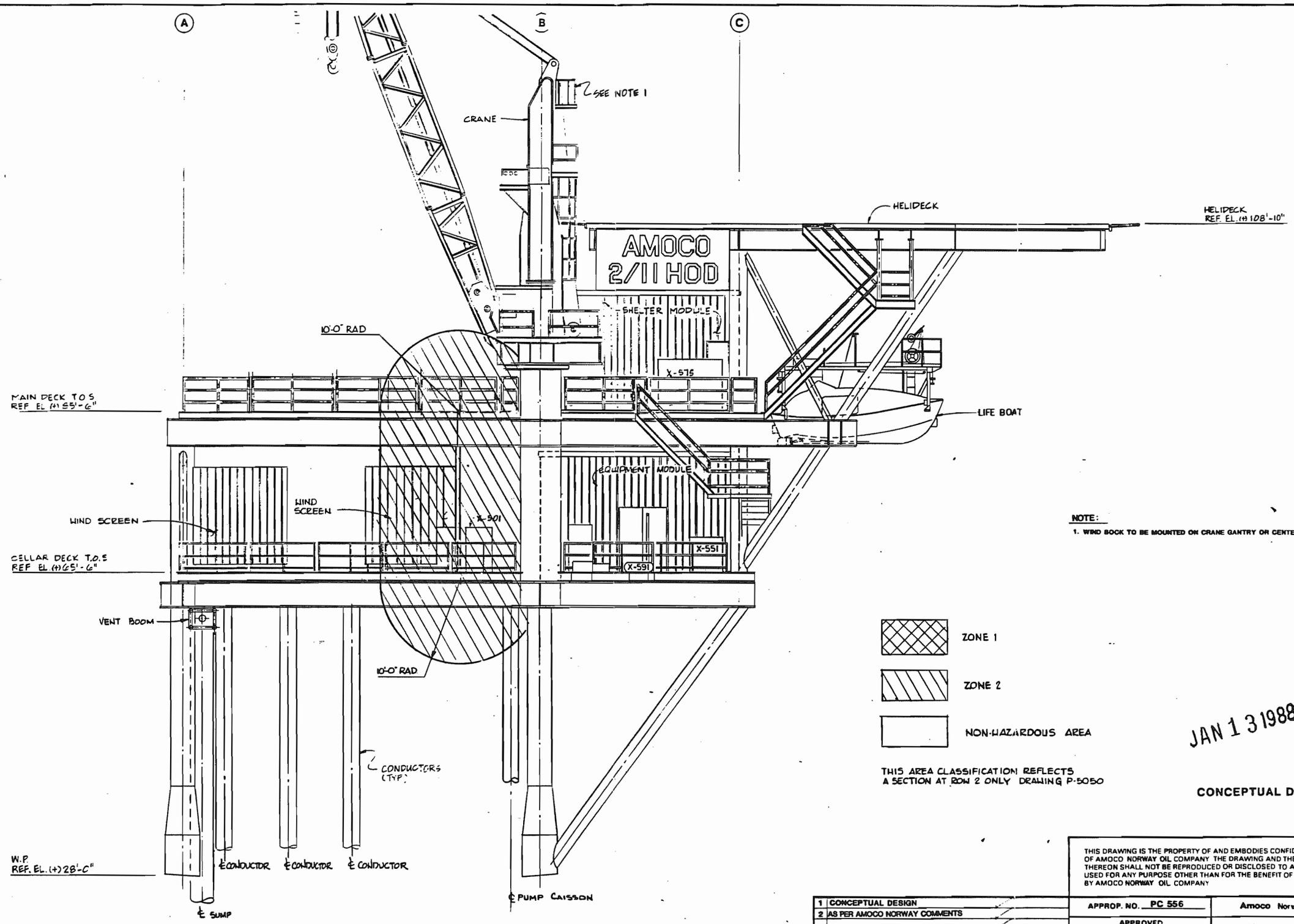

ELEVATION ROW "2"

SCALE 3/16"=1'-0"

NOTE:

1. WIND BOCK TO BE MOUNTED ON CRANE GANTRY OR CENTER POST.

ZONE 1

ZONE 2

NON-HAZARDOUS AREA

THIS AREA CLASSIFICATION REFLECTS A SECTION AT ROW 2 ONLY DRAWING P-5050

JAN 13 1988

CONCEPTUAL DESIGN

THIS DRAWING IS THE PROPERTY OF AND EMBODIES CONFIDENTIAL INFORMATION OF AMOCO NORWAY OIL COMPANY THE DRAWING AND THE INFORMATION THEREON SHALL NOT BE REPRODUCED OR DISCLOSED TO ANY OTHER PARTY OR USED FOR ANY PURPOSE OTHER THAN FOR THE BENEFIT OF AND AS AUTHORIZED BY AMOCO NORWAY OIL COMPANY

NO	DESCRIPTION	BY	AP	AP	DATE
1	CONCEPTUAL DESIGN				
2	AS PER AMOCO NORWAY COMMENTS				

REVISION

APPROP. NO. PC 556

APPROVED FOR CONSTRUCTION

BY _____ DATE _____

PROCESS BY _____ MECHANICAL BY _____

BJ H3-87

Amoco Norway Oil Company

AREA CLASSIFICATION
ELEVATION ROW "2"
HOD PLATFORM

SCALE | FILE NO. | DWG. NO. P-5056 | REV. 2

EXHIBIT 5.20

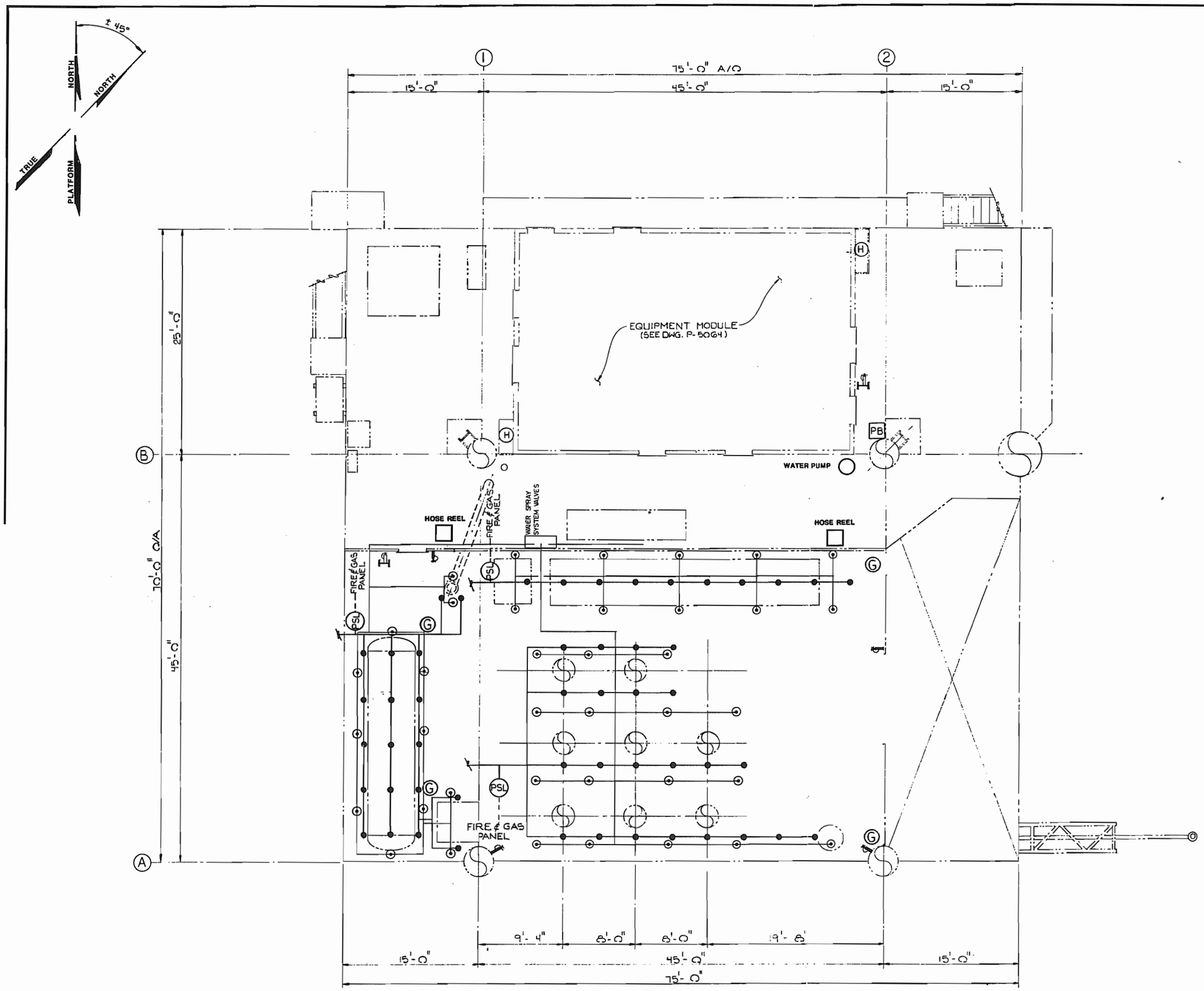

CELLAR DECK
FIRE & GAS LAYOUT
T.O.S. EL. (+) 65'-6"
SCALE: 3/16" = 1'-0"

LEGEND

- OPEN SPRAY NOZZLE
- TUBING W/FUSIBLE LINK
- PORTABLE FIRE EXTINGUISHER
- PORTABLE WHEELED EXTINGUISHER
- PB ESD/FIRE PUSH BUTTON
- G GAS DETECTOR
- H HALON UNIT
- PSL LOW PRESSURE SWITCH

NOTE:

1. FUSIBLE LOOP GRID SYSTEM IS LOCATED ABOVE AND/OR AROUND EQUIPMENT.
2. NOS. & LOCATIONS OF SPRAY NOZZLES ARE DIAGRAMMATIC ONLY AND ARE SUBJECT TO DETAILED DESIGN.

CONCEPTUAL DESIGN

THIS DRAWING IS THE PROPERTY OF AND EMBODIES CONFIDENTIAL INFORMATION OF AMOCO NORWAY OIL COMPANY. THE DRAWING AND THE INFORMATION THEREON SHALL NOT BE REPRODUCED OR DISCLOSED TO ANY OTHER PARTY OR USED FOR ANY PURPOSE OTHER THAN FOR THE BENEFIT OF AND AS AUTHORIZED BY AMOCO NORWAY OIL COMPANY.

NO.	DESCRIPTION	DR	CK	AP	VP	DATE
1	CONCEPTUAL DESIGN					
2						

REVISION

APPROP. NO. PC-556

APPROVED FOR CONSTRUCTION
BY _____ DATE _____

PROCESS			MECHANICAL		
BY			BY		
DR	DATE	CK	DATE	AP	DATE

Amoco Norway Oil Company

CELLAR DECK FIRE & GAS LAYOUT HOD PLATFORM

SCALE	FILE NO.	DWG NO.	REV
		P-5060	1

EXHIBIT 5.21

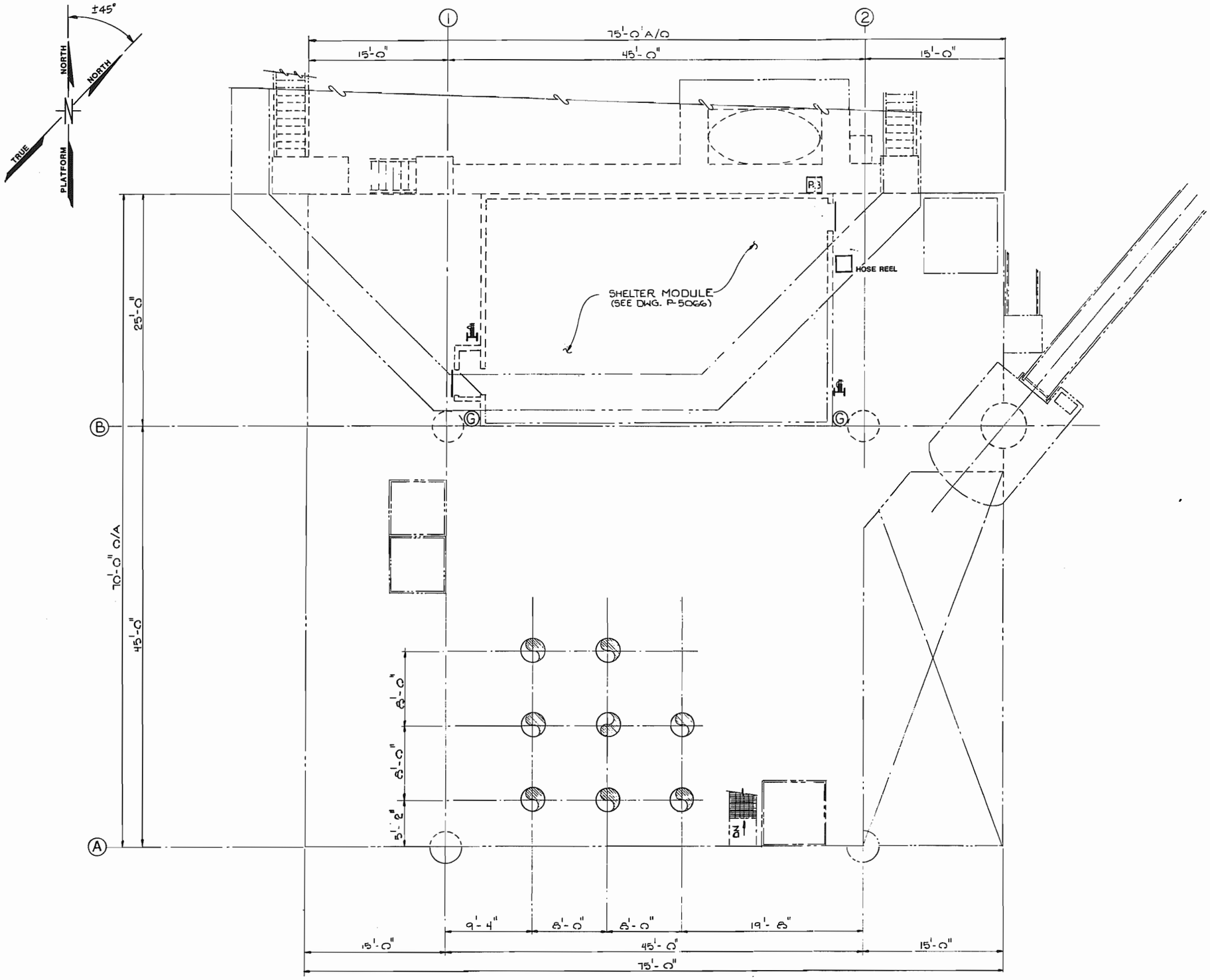

MAIN DECK
FIRE & GAS LAYOUT
T.O.S. EL.(+) 85'-6"
SCALE: 3/16"=1'-0"

LEGEND

- PORTABLE FIRE EXTINGUISHER
- PORTABLE WHEELED EXTINGUISHER
- PB ESD/ FIRE PUSH BUTTON
- G GAS DETECTOR

CONCEPTUAL DESIGN

THIS DRAWING IS THE PROPERTY OF AND EMBODIES CONFIDENTIAL INFORMATION OF AMOCO NORWAY OIL COMPANY. THE DRAWING AND THE INFORMATION THEREON SHALL NOT BE REPRODUCED OR DISCLOSED TO ANY OTHER PARTY OR USED FOR ANY PURPOSE OTHER THAN FOR THE BENEFIT OF AND AS AUTHORIZED BY AMOCO NORWAY OIL COMPANY.

NO.	DESCRIPTION	DR	CK	AP	AP	DATE
1	CONCEPTUAL DESIGN					

REVISION

APPROP. NO. PC-556

APPROVED FOR CONSTRUCTION
BY _____ DATE _____

PROCESS		MECHANICAL	
BY		BY	
DR	DATE	CK	DATE	AP	DATE

Amoco Norway Oil Company

MAIN DECK FIRE & GAS LAYOUT HOD PLATFORM

SCALE	FILE NO	DWG NO	REV
		P-5062	1

EXHIBIT 5.22

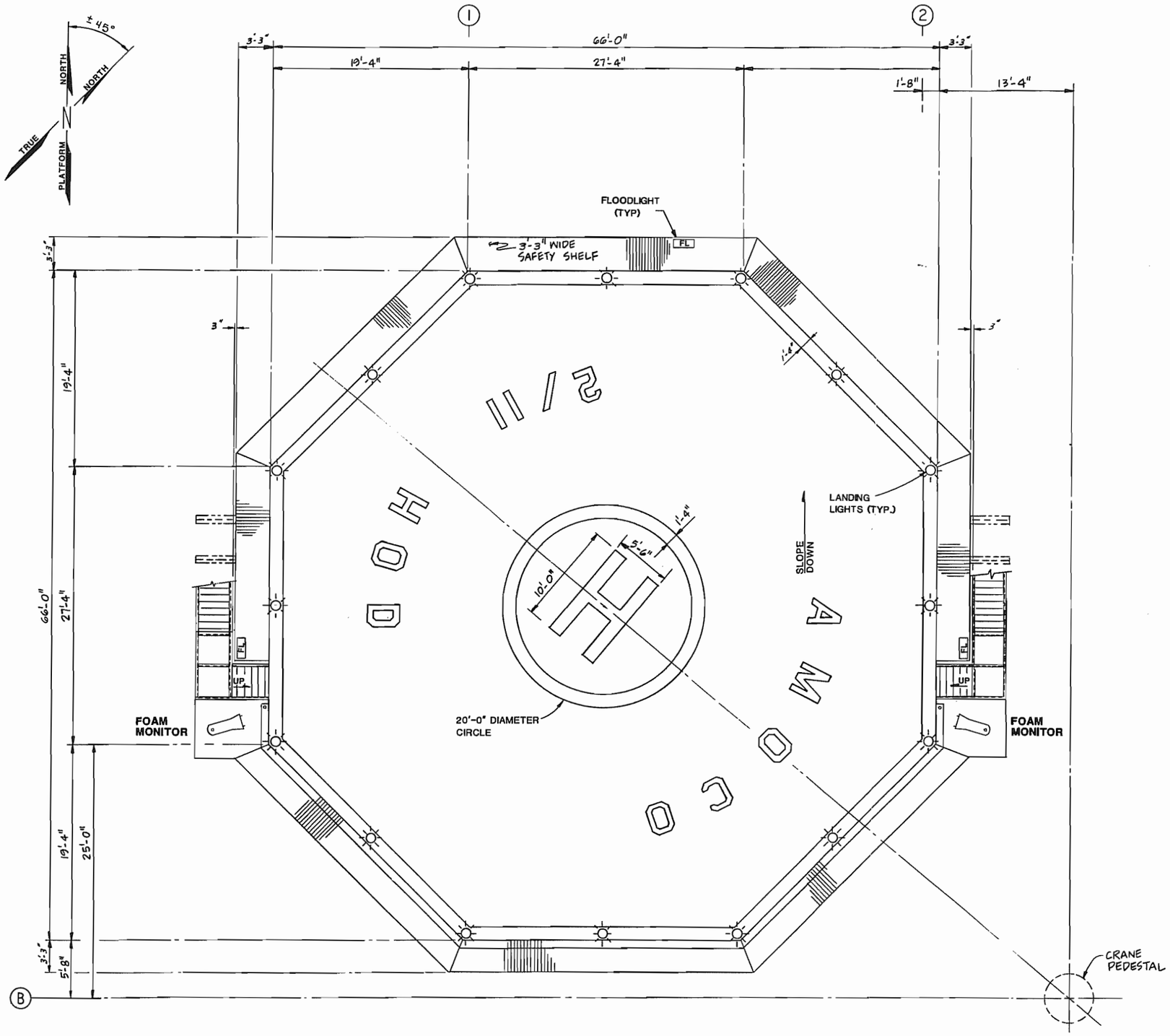

HELIDECK PLAN

T.O.S. EL. (+) 108'-10"
SCALE: 3/16" = 1'-0"

NOTES:

1. BLUE AND WHITE LANDING LIGHTS SPACED ALTERNATELY AROUND HELIDECK AS INDICATED
2. HELIDECK TO BE PAINTED GRAY, HELICOPTER SYMBOL AND CIRCLE YELLOW. "AMOCO" AND "2/11 HOD" TO BE WHITE.
3. WIND SOCK MOUNTED ON CRANE GANTRY OR CENTER POST.
4. CRANE GANTRY OR POST WILL BE LOCATED GREATER THAN 1/3 ROTOR DIAMETER FROM THE PERIPHERY OF THE HELIDECK.
5. THREE FLOODLIGHTS ARE REQUIRED, SHOWN THUSLY FL

CONCEPTUAL DESIGN

THIS DRAWING IS THE PROPERTY OF AND EMBODIES CONFIDENTIAL INFORMATION OF AMOCO NORWAY OIL COMPANY. THE DRAWING AND THE INFORMATION THEREON SHALL NOT BE REPRODUCED OR DISCLOSED TO ANY OTHER PARTY OR USED FOR ANY PURPOSE OTHER THAN FOR THE BENEFIT OF AND AS AUTHORIZED BY AMOCO NORWAY OIL COMPANY.

NO.	DESCRIPTION	DR	CK	AP	AP	DATE
1	CONCEPTUAL DESIGN					

REVISION

APPROP. NO. PC 556

APPROVED FOR CONSTRUCTION
BY_____ DATE_____

PROCESS BY_____ MECHANICAL BY_____

DR	DATE	CK	DATE	AP	DATE

Amoco Norway Oil Company

HELIDECK
FIRE & GAS LAYOUT
HOD PLATFORM

SCALE	FILE NO	DWG. NO	REV
		P-5068	A

EXHIBIT 5.23

SHEET 1 OF 3 SHEETS

SAFETY ANALYSIS
FUNCTION EVALUATION CHART
(SAFE)

PLATFORM IDENTIFICATION:

AMOCO NORWAY HOD PLATFORM

FIRE AND GAS SYSTEM

PROCESS COMPONENT IDENTIFICATION	PROCESS COMPONENT SERVICE		ALTERNATE PROTECTION SAC REF NUMBER	ALTERNATE PROTECTION ALTERNATE DEVICE IF APPLICABLE	ESD-1	ESD-2	ACTIVATE HALON SIGNAL	AUDIBLE AND VISUAL ALARMS	FIRE & GAS PANEL ALARM	ALARM ON VALHALL	STOP SUMP PUMP P-570	START UTILITY WATER PUMP P-561	START GENERATORS G-551, 552	STOP GENERATORS G-551, 552	SHUT OFF DIESEL FUEL G551, G552	STOP HVAC (EQUIPMENT ROOM AND SHOP)	CLOSE LOUVRES	STOP EMERGENCY GENERATOR G-553	SHUT OFF DIESEL FUEL G553	STOP HVAC (EMERGENCY)	DUMP HALON (EMERGENCY GENERATOR ROOM)	DUMP HALON (MAIN GENERATOR ROOM)	STOP DIESEL PUMPS (P-551 A, B)	TRIP MAIN/EMERGENCY TIE BREAKER	ISOLATE ELECTRICAL POWER SUPPLY TO DESIGNATED AREA	SHUT DOWN HVAC (SHELTER)	START EMERGENCY GENERATOR G-553	CLOSE ALL WING VALVES	CLOSE ALL UPPER MASTER VALVES	CLOSE ALL DOWNHOLE VALVES	SHUT DOWN CHEMICAL INJECTION PUMPS	OPEN PV-5043
	FUSIBLE PLUG LOOP					X		X	X		X																				
	WELL HEAD AREA																														
	FUSIBLE PLUG LOOP					X		X	X		X																				
	MANIFOLD AREA																														
	FUSIBLE PLUG LOOP					X		X	X		X																				
	SEPARATOR/LAUNCHER																														
	VALHALL REMOTE					X					X																				
	PRODUCTION SHUTDOWN																														
	VALHALL REMOTE				X																										
	EMERGENCY SHUTDOWN																														
	WELLHEAD/PROCESS AREA							X	X																						
	GAS DETECTOR LOW LEVEL																														
	WELLHEAD/PROCESS AREA					X			X																						
	GAS DETECTOR HIGH LEVEL																														
	MANUAL FIRE					X		X	X		X																				
	PUSHBUTTON																														
	MANUAL ESD				X																										
	PUSHBUTTON																														
	MAIN GENERATOR ROOM					X	X	X	X					X	X		X				X					X					
	HEAT DETECTORS (CONFIRMED)																														
	MAIN GENERATOR ROOM							X	X																						
	ANY UNCONFIRMED HEAT DETECTION																														
	MAIN GENERATOR ROOM							X	X																						
	GAS DETECTOR LOW LEVEL																														
	MAIN GENERATOR ROOM					X		X	X					X			X									X					
	GAS DETECTOR HIGH LEVEL																														
	MAIN GENERATOR ROOM					X	X	X	X					X	X		X				X					X					
	MANUAL FIRE PUSH BUTTON																														
	EMERGENCY GENERATOR ROOM					X	X	X	X				X					X	X	X	X										
	CONFIRMED HEAT DETECTION																														
	EMERGENCY GENERATOR ROOM							X	X																						
	UNCONFIRMED HEAT DETECTION																														
	HELIDECK				X																										
	ESD PUSH BUTTON																														
	LIFE BOAT OR LIFE RAFT				X																										
	ESD PUSH BUTTON																														
	EMERGENCY GENERATOR ROOM					X	X	X	X		X						X	X	X	X											
	MANUAL FIRE PUSH BUTTON																														
	BATTERY ROOM	UNCONFIRMED						X	X	X																					
	HEAT DETECTOR ALARM	CONFIRMED																													
	BATTERY ROOM	LL				X		X	X	X														X							
	GAS DETECTOR LOW/HIGH ALARM	HL																													
	ELECTRICAL EQUIPMENT ROOM					X		X	X	X				X	X								X			X					
	GAS DETECTOR HIGH LEVEL																														
	ELECTRICAL EQUIPMENT ROOM							X	X	X																					
	GAS DETECTOR LOW LEVEL																														
	ELECTRICAL EQUIPMENT ROOM	UNCONFIRMED						X	X	X																					
	SMOKE DETECTOR	CONFIRMED				X		X	X	X				X	X								X			X					
	EMERGENCY SWITCHGEAR ROOM																														
	GAS DETECTOR LOW LEVEL																														
	EMERGENCY SWITCHGEAR ROOM					X		X	X	X				X				X		X			X	X							
	GAS DETECTOR HIGH LEVEL																														
	EMERGENCY SWITCHGEAR ROOM	UNCONFIRMED						X	X	X																					
	SMOKE DETECTOR	CONFIRMED				X		X	X	X				X				X		X			X	X							
	SHOP	UNCONFIRMED																													
	HEAT DETECTOR	CONFIRMED																													
	SHELTER MODULE	UNCONFIRMED						X	X	X																					
	SMOKE DETECTOR	CONFIRMED				X		X	X	X																					
	SHELTER MODULE																														
	HEAT DETECTOR																														
	SHELTER MODULE							X	X	X																					
	GAS DETECTOR LOW LEVEL																														
	SHELTER MODULE	UNCONFIRMED						X	X	X																					
	GAS DETECTOR HIGH LEVEL	CONFIRMED				X																		X	X						
	SHELTER MODULE					X		X	X	X	X																				
	FIRE PUSH BUTTON																														
	HELIDECK FIRE					X					X																				
	PUSH BUTTON																														
	LIFE BOAT OR LIFE RAFT					X					X																				
	FIRE PUSH BUTTON																														
ESD-1	COMPLETE PLATFORM							X	X	X				X	X	X	X	X	X	X			X			X		X	X	X	X
	SHUT DOWN																														
ESD-2	PRODUCTION SHUT DOWN							X	X	X	X												X					X	X	X	X

THIS DRAWING IS THE PROPERTY OF AND EMBODIES CONFIDENTIAL INFORMATION OF AMOCO NORWAY OIL COMPANY. THE DRAWING AND THE INFORMATION THEREON SHALL NOT BE REPRODUCED OR DISCLOSED TO ANY OTHER PARTY OR USED FOR ANY PURPOSE OTHER THAN FOR THE BENEFIT OF AND AS AUTHORIZED BY AMOCO NORWAY OIL COMPANY.

APPROP NO. 556 (HOD)

APPROVED FOR CONSTRUCTION — BY — DATE

PROCESS — BY — MECHANICAL — BY

Amoco Norway Oil Company

ALARM AND SHUTDOWN CAUSE AND EFFECT

HOD PLATFORM

N.A.

P-5210

2

EXHIBIT 5.24

SHEET 2 OF 3 SHEETS

SAFETY ANALYSIS
FUNCTION EVALUATION CHART
(SAFE)

PLATFORM IDENTIFICATION:
AMOCO NORWAY HOD PLATFORM

WELL HEAD/PROCESS/PIPELINE

NOTE: "X" INDICATES INDIVIDUAL WELL NUMBER. MAY BE 1 THRU 8

PROCESS COMPONENT IDENTIFICATION	SERVICE	ALTERNATE PROTECTION SAC REF. NUMBER	ALTERNATE PROTECTION ALTERNATE DEVICE IF APPLICABLE	SHUTDOWN OR CONTROL DEVICE I.D.	FUNCTION PERFORMED	ALARM IN ELECTRICAL EQUIPMENT ROOM	ALARM ON VALVMAL	AUDIBLE ALARM	ESD-2	SHUT ASSOCIATED WING VALVE	SHUT ASSOCIATED UPPER MASTER	SHUT ASSOCIATED DOWNHOLE VALVE	SHUT ALL WING VALVES	SHUT ALL UPPER MASTER VALVES	OPEN PV-5043	CLOSE LV-5041	SHUT ALL DOWNHOLE VALVES	SHUT DOWN SUMP PUMP	SHUT DOWN CHEMICAL INJECTION	PIPELINE BLOCK VALVE 5034
PSL 5008-X	WELLHEAD PRESSURE LOW					X	X	X		X	X	X								
PSL 5010-X PSL 5012-X	WELL FLOW LINE PRESSURE LOW					X	X	X		X	X	X								
ZIL 5003-X	WELL UPPER MASTER VALVE FAIL TO CLOSE					X	X	X					X	X	X		X	X	X	
ZIL 5008-X	WELL WING VALVE FAIL TO CLOSE					X	X	X					X	X	X		X	X	X	
PSH 5015	BYPASS HEADER HIGH PRESSURE					X	X	X					X	X	X		X	X	X	
PSHH 5016	BYPASS HEADER HIGH HIGH PRESSURE					X	X	X					X	X	X		X	X	X	
PSH 5017	PRODUCTION HEADER HIGH PRESSURE					X	X	X					X	X	X		X	X	X	
PSHH 5018	PRODUCTION HEADER HIGH HIGH PRESSURE					X	X	X					X	X	X		X	X	X	
PSLL 5033	SEPARATOR LOW PRESSURE S/D																			
PSL 5032	SEPARATOR LOW PRESSURE ALARM								X	X	X	X								
PSH 5052	SEPARATOR HIGH PRESSURE ALARM								X	X	X	X								
LSLL 5038	SEPARATOR LOW LIQUID LEVEL								X	X	X	X								
LSL 5041	SEPARATOR LOW LIQUID ALARM								X	X	X	X								
LSH 5041	SEPARATOR HIGH LIQUID ALARM								X	X	X	X								
PSLL 5081	PIPELINE LOW PRESSURE S/D								X	X	X	X								
PSHH 5085	PIPELINE HIGH PRESSURE S/D								X	X	X	X								
PSL 5080	PIPELINE LOW PRESSURE ALARM								X	X	X	X								
PSH 5080	PIPELINE HIGH PRESSURE ALARM								X	X	X	X								
	HYDRAULIC POWER PACK SYSTEM FAILURE																			
	VALMALL REMOTE MANUAL PIPELINE ISOLATION OPERATION																			
	HOD LOCAL MANUAL PIPELINE ISOLATION OPERATION																			
3	VALMALL PROCESS SHUTDOWN																			

THIS DRAWING IS THE PROPERTY OF AND EMBODIES CONFIDENTIAL INFORMATION OF AMOCO NORWAY OIL COMPANY. THE DRAWING AND THE INFORMATION THEREON SHALL NOT BE REPRODUCED OR DISCLOSED TO ANY OTHER PARTY OR USED FOR ANY PURPOSE OTHER THAN FOR THE BENEFIT OF AND AS AUTHORIZED BY AMOCO NORWAY OIL COMPANY

NO	DESCRIPTION	BY	AP	DATE
	REVISION			

APPROP. NO. 556 (HOD)

APPROVED FOR CONSTRUCTION
BY _____ DATE _____
PROCESS BY _____ MECHANICAL BY _____

TEC 10-6-87

Amoco Norway Oil Company

ALARM AND SHUTDOWN CAUSE AND EFFECT

HOD PLATFORM

SCALE N.A. | FILE NO. | DWG NO. P-5211 | BY 3

EXHIBIT 5.25

SHEET 3 OF 3 SHEETS

SAFETY ANALYSIS
FUNCTION EVALUATION CHART
(SAFE)

PLATFORM IDENTIFICATION:
AMOCO NORWAY HOD PLATFORM

UTILITIES

PROCESS COMPONENT IDENTIFICATION	PROCESS COMPONENT SERVICE	ALTERNATE PROTECTION SAC. REF. NUMBER	ALTERNATE PROTECTION ALTERNATE DEVICE IF APPLICABLE	SHUTDOWN OR CONTROL DEVICE I.D.	FUNCTION PERFORMED	AUDIBLE ALARM (P.A.)	ALARM IN ELECTRICAL EQUIPMENT ROOM	ALARM ON VALHALL	LOCAL AUDIBLE AND VISIBLE ALARM (DIESEL TANK FULL)	STOP DIESEL PUMPS (P-551A,B)	DISCONNECT TANK HEATER	STOP WATER PRESSURE PUMP P-560	CLOSE DRAIN LINE SOLENOID VALVES
LSH	CRANE PEDESTAL DIESEL TANK HIGH LEVEL					X	X		X				
LSL	CRANE PEDESTAL DIESEL TANK LOW LEVEL					X				X			
LSL	CRANE DAY TANK LOW						X						
LSL	MAIN GENERATOR DAY TANK LOW LEVEL					X	X			X			
LSH	MAIN GENERATOR DAY TANK HIGH LEVEL					X	X						
LSL	EMERGENCY GENERATOR DAY TANK LOW LEVEL					X	X			X			
LSH	EMERGENCY GENERATOR DAY TANK HIGH LEVEL					X	X						
LSH	DIESEL FILTER HIGH WATER LEVEL					X	X						
LSL	POTABLE WATER TANK LOW LEVEL ALARM					X	X						
LSLL	POTABLE WATER TANK LOW LEVEL SHUT DOWN					X	X						
LSLL	POTABLE WATER PRESSURE TANK LOW LEVEL S/D					X							
PSH	SUMP CAISSON HIGH PRESSURE ALARM					X	X						
	NAVIGATION LIGHT SYSTEM FAILURE					X	X						
	FOG SIGNAL SYSTEM FAILURE					X	X						

NO	DESCRIPTION	CO	CK	AP	AP	DATE
	REVISION					

THIS DRAWING IS THE PROPERTY OF AND EMBODIES CONFIDENTIAL INFORMATION OFAMOCO NORWAY OIL COMPANY. THE DRAWING AND THE INFORMATION THEREON SHALL NOT BE REPRODUCED OR DISCLOSED TO ANY OTHER PARTY OR USED FOR ANY PURPOSE OTHER THAN FOR THE BENEFIT OF AND AS AUTHORIZED BYAMOCO NORWAY OIL COMPANY.

APPROP. NO. 556 (HOD)

APPROVED FOR CONSTRUCTION
BY _____ DATE _____
PROCESS BY _____ MECHANICAL BY _____

DR	DATE	CK	DATE	AP	DATE
TEC	10-6-87				

Amoco Norway Oil Company

ALARM AND SHUTDOWN CAUSE AND EFFECT

HOD PLATFORM

SCALE	FILE NO	DWG. N.	REV
N.A.		P-5212	1

EXHIBIT 5.26

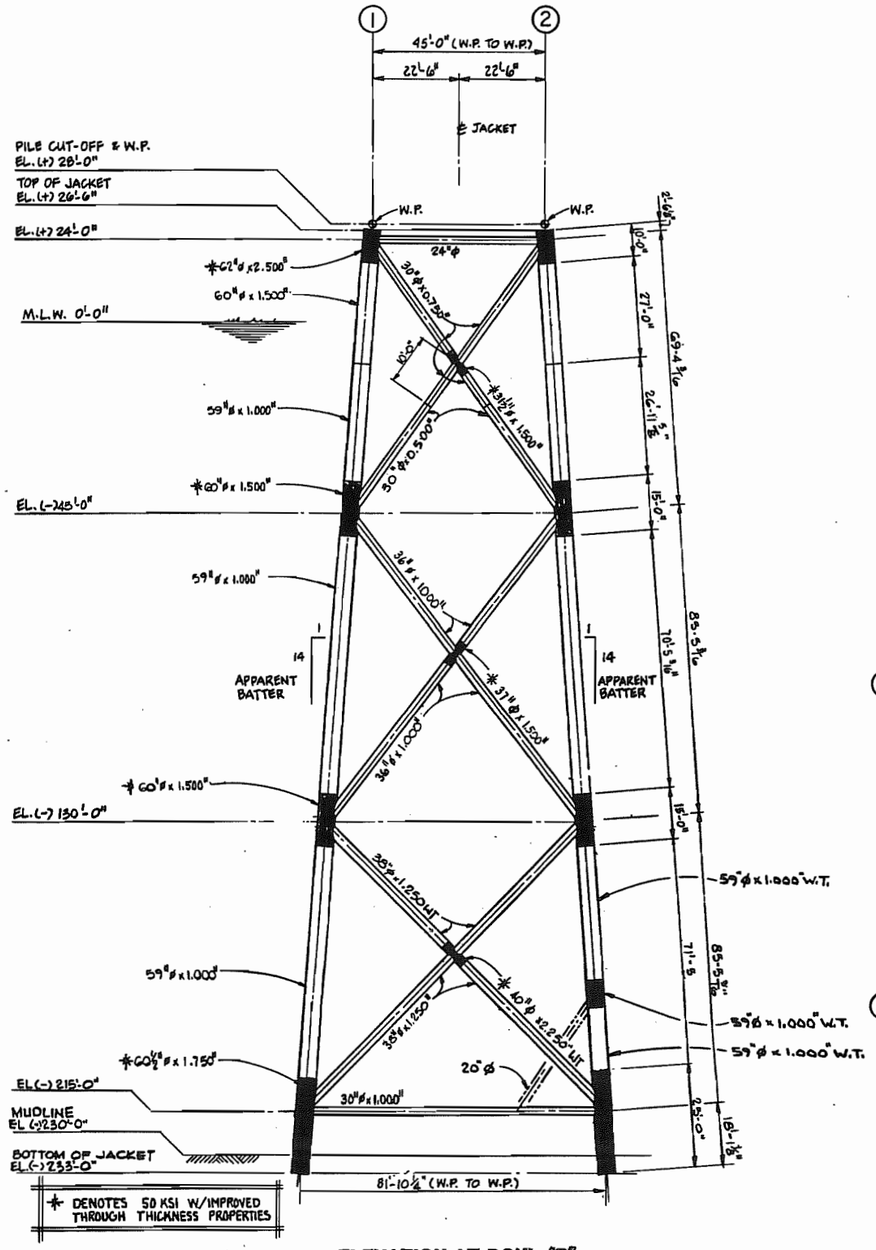

ELEVATION AT ROW "B"

SCALE — 1" = 20'-0"

ROWS "A", "1" & "2" SIMILAR

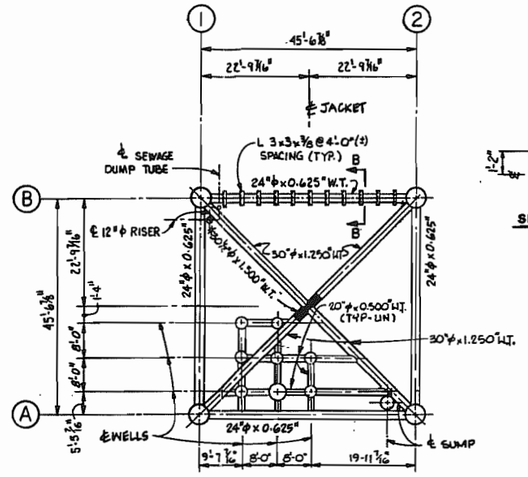

PLAN AT EL. (+) 24'-0"

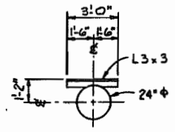

SECTION "B-B"

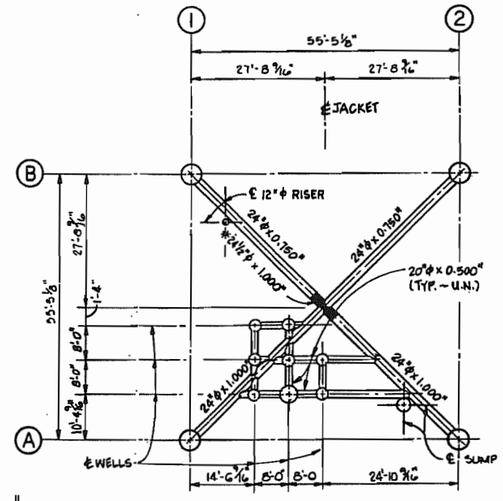

PLAN AT EL. (-) 45'-0"

* DENOTES 50 KSI W/IMPROVED THROUGH THICKNESS PROPERTIES

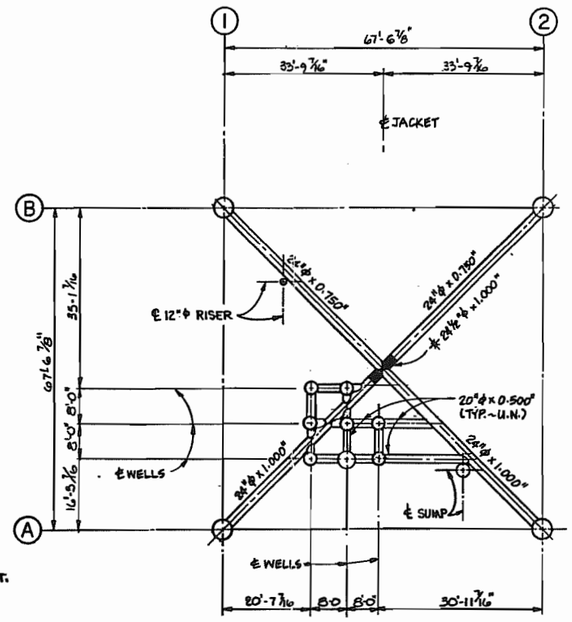

PLAN AT EL. (-) 130'-0"

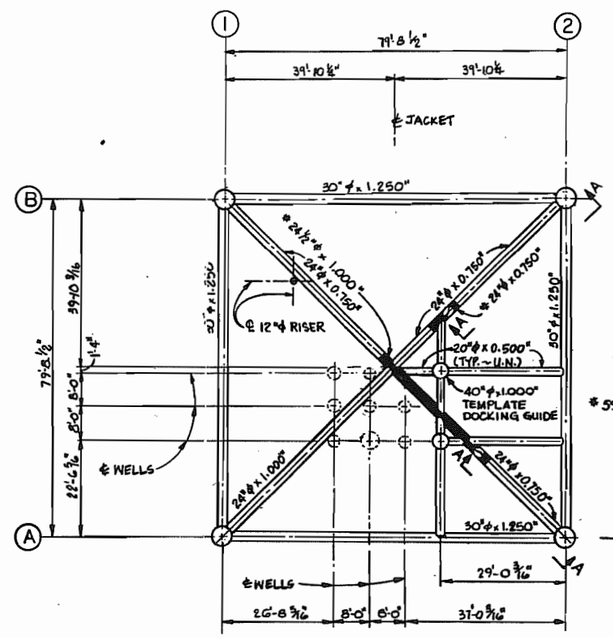

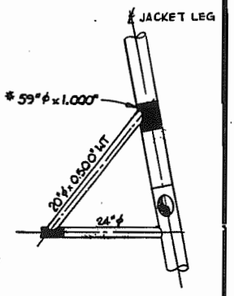

SECTION "A-A"

PLAN AT EL. (-) 215'-0"

CONCEPTUAL DESIGN

NOTES:

1. MUDMATS NOT SHOWN.

THIS DRAWING IS THE PROPERTY OF AND EMBODIES CONFIDENTIAL INFORMATION OF AMOCO NORWAY OIL COMPANY. THE DRAWING AND THE INFORMATION THEREON SHALL NOT BE REPRODUCED OR DISCLOSED TO ANY OTHER PARTY OR USED FOR ANY PURPOSE OTHER THAN FOR THE BENEFIT OF AND AS AUTHORIZED BY AMOCO NORWAY OIL COMPANY.

NO.	DESCRIPTION	DR	AP	AP	DATE
1	CONCEPTUAL DESIGN				

REVISION

APPROP. NO. PC 556

APPROVED FOR CONSTRUCTION

BY_____ DATE_____

PROCESS BY_____ | MECHANICAL BY_____

DR	DATE	CK	DATE	AP	DATE

Amoco Norway Oil Company

JACKET PLANS & ELEVATIONS

HOD PLATFORM

SCALE	FILE NO	DWG NO	REV
		P-5020	1

EXHIBIT 5.27

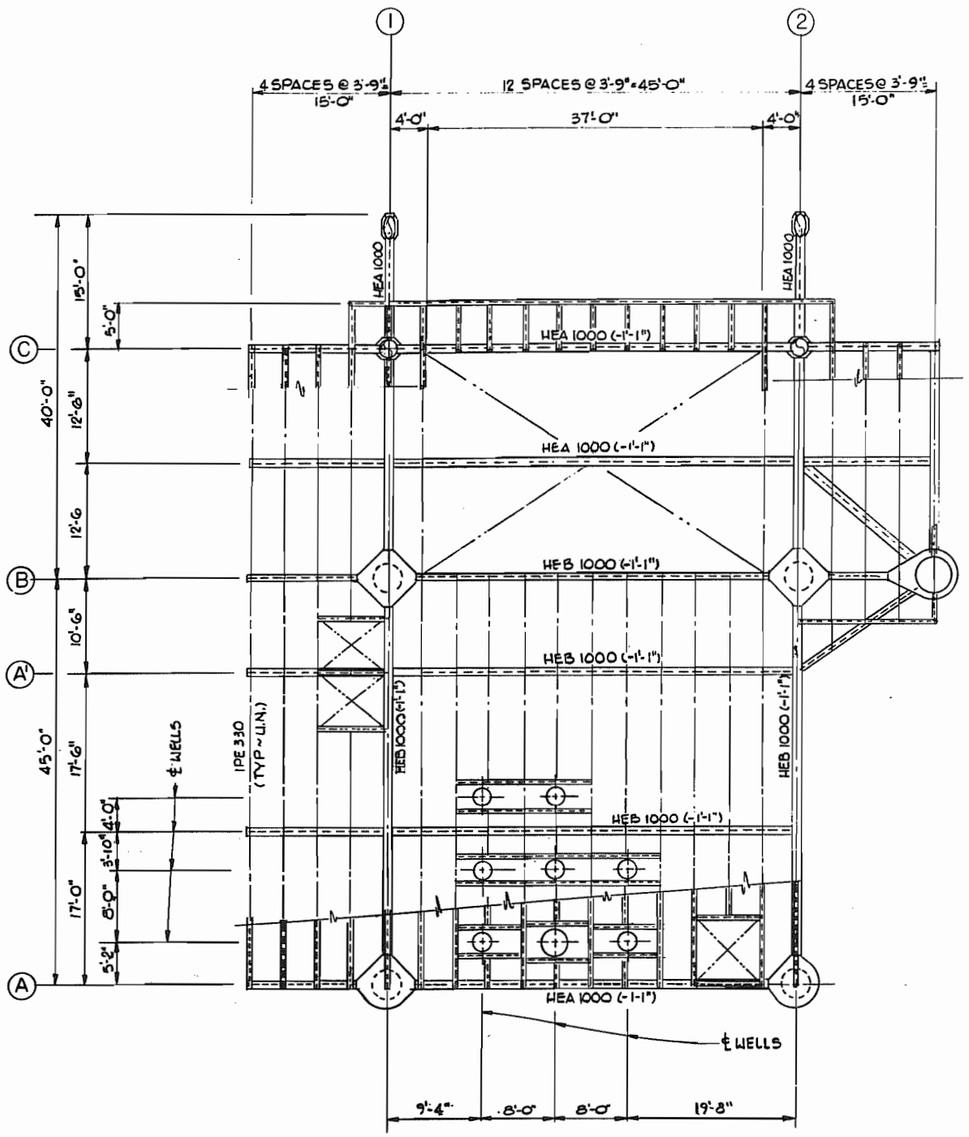

MAIN DECK PLAN

SCALE: 1/8"=1'-0"

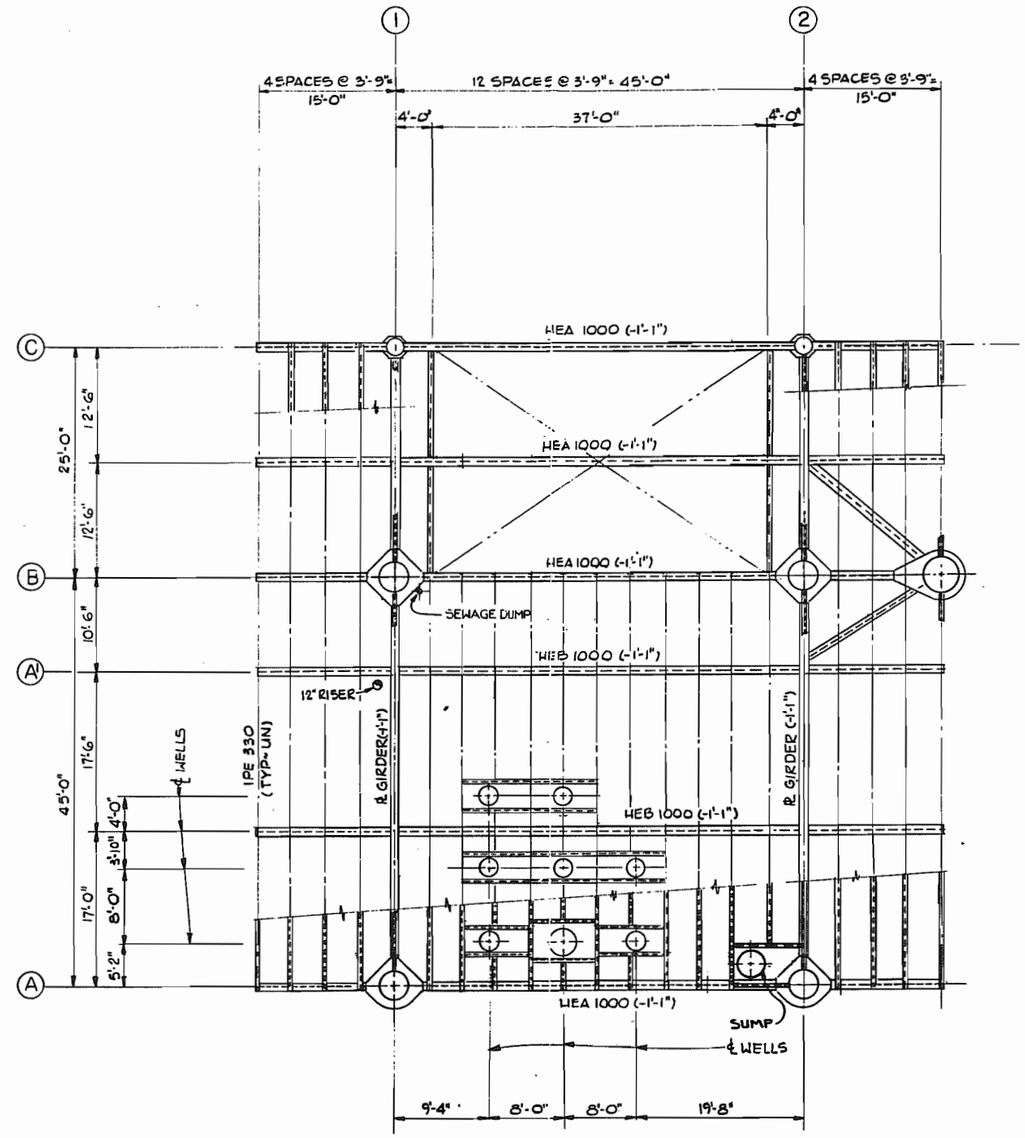

CELLAR DECK PLAN

SCALE: 1/8"=1'-0"

CONCEPTUAL DESIGN

THIS DRAWING IS THE PROPERTY OF AND EMBODIES CONFIDENTIAL INFORMATION OF AMOCO NORWAY OIL COMPANY. THE DRAWING AND THE INFORMATION THEREON SHALL NOT BE REPRODUCED OR DISCLOSED TO ANY OTHER PARTY OR USED FOR ANY PURPOSE OTHER THAN FOR THE BENEFIT OF AND AS AUTHORIZED BY AMOCO NORWAY OIL COMPANY.

NO.	DESCRIPTION	DR	CK	AP	AP	DATE
1	CONCEPTUAL DESIGN					

REVISION

APPROP. NO. PC 556

APPROVED FOR CONSTRUCTION

BY_____ DATE_____

PROCESS			MECHANICAL		
BY			BY		
DR	DATE	CK	DATE	AP	DATE

Amoco Norway Oil Company

DECK PLANS

HOD PLATFORM

SCALE	FILE NO	DWG. NO.	REV.
		P-5030	1

EXHIBIT 5.28

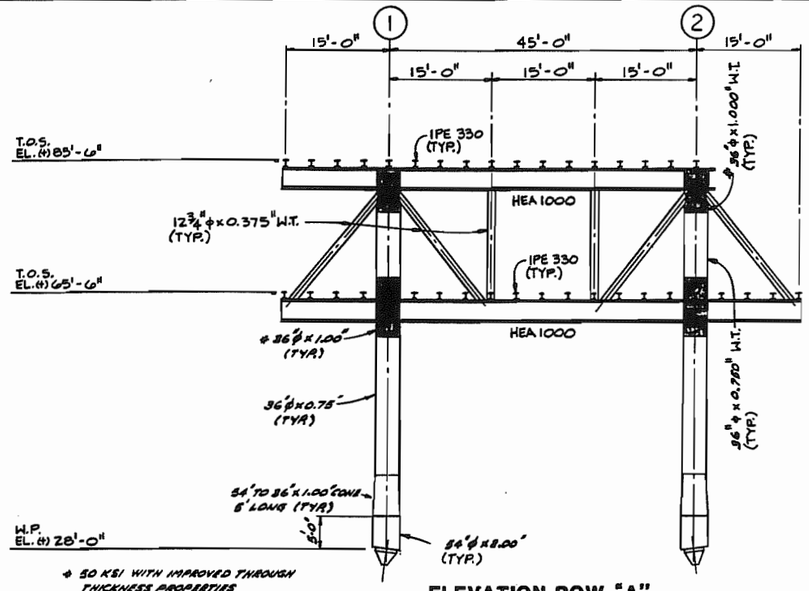

ELEVATION ROW "A"

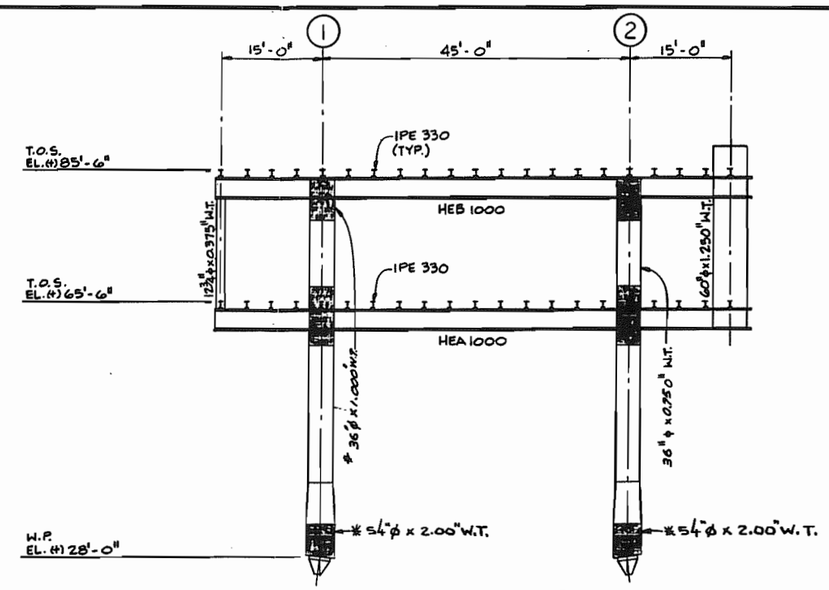

ELEVATION ROW "B"

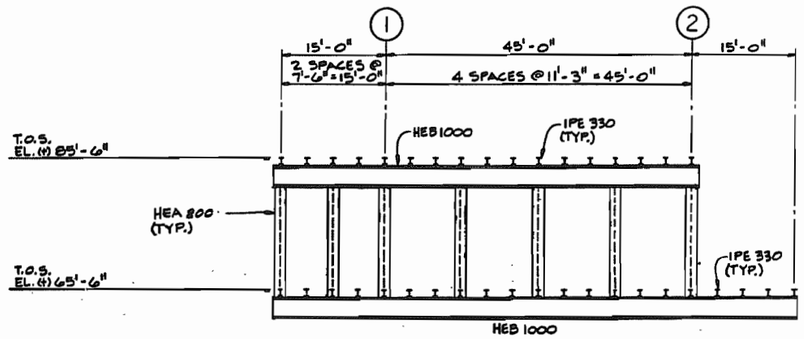

ELEVATION ROW "A'"

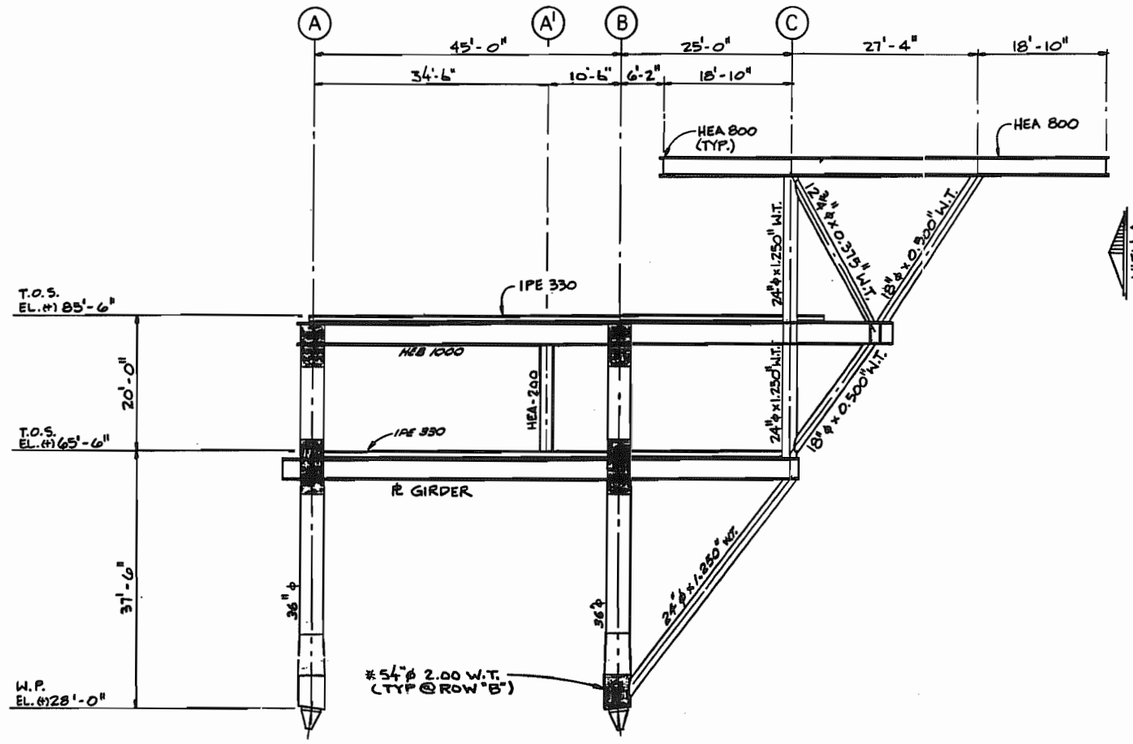

ELEVATION ROW "1" (AS SHOWN)

ELEVATION ROW "2" (SIM)

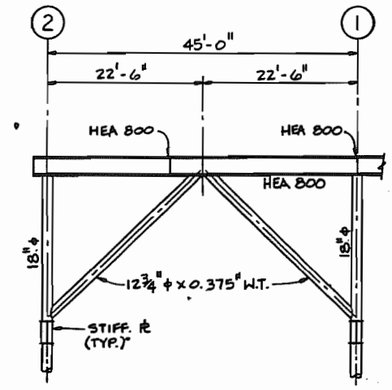

VIEW "A"

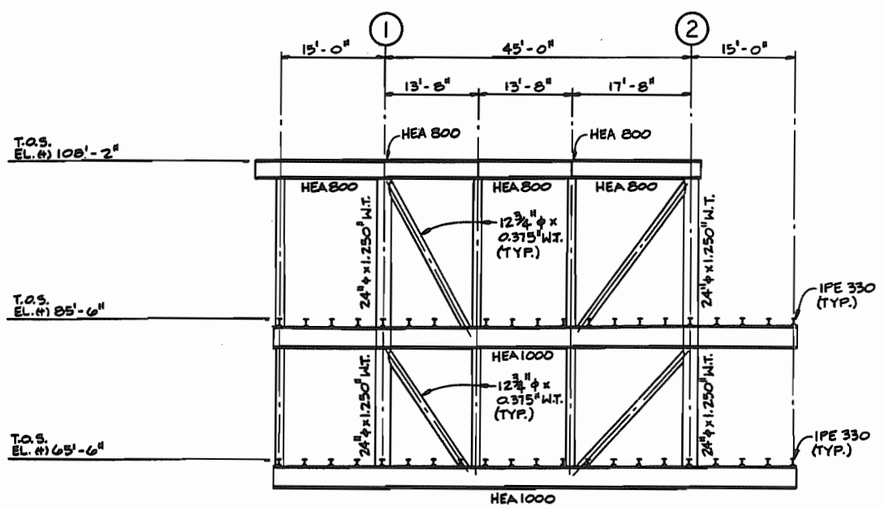

ELEVATION ROW "C"

CONCEPTUAL DESIGN

THIS DRAWING IS THE PROPERTY OF AND EMBODIES CONFIDENTIAL INFORMATION OF AMOCO NORWAY OIL COMPANY. THE DRAWING AND THE INFORMATION THEREON SHALL NOT BE REPRODUCED OR DISCLOSED TO ANY OTHER PARTY OR USED FOR ANY PURPOSE OTHER THAN FOR THE BENEFIT OF AND AS AUTHORIZED BY AMOCO NORWAY OIL COMPANY.

NO.	DESCRIPTION	DR	CK	P	AP	DATE
1	CONCEPTUAL DESIGN					

REVISION

APPROP. NO. PC 556

APPROVED FOR CONSTRUCTION

BY_____ DATE_____

PROCESS BY_____ MECHANICAL BY_____

DR	DATE	CK	DATE	AP	DATE

Amoco Norway Oil Company

DECK ELEVATIONS
HOD PLATFORM

SCALE	FILE NO	DWG. NO.	REV
1/152"=1'-0"		P-5040	1

EXHIBIT 5.29

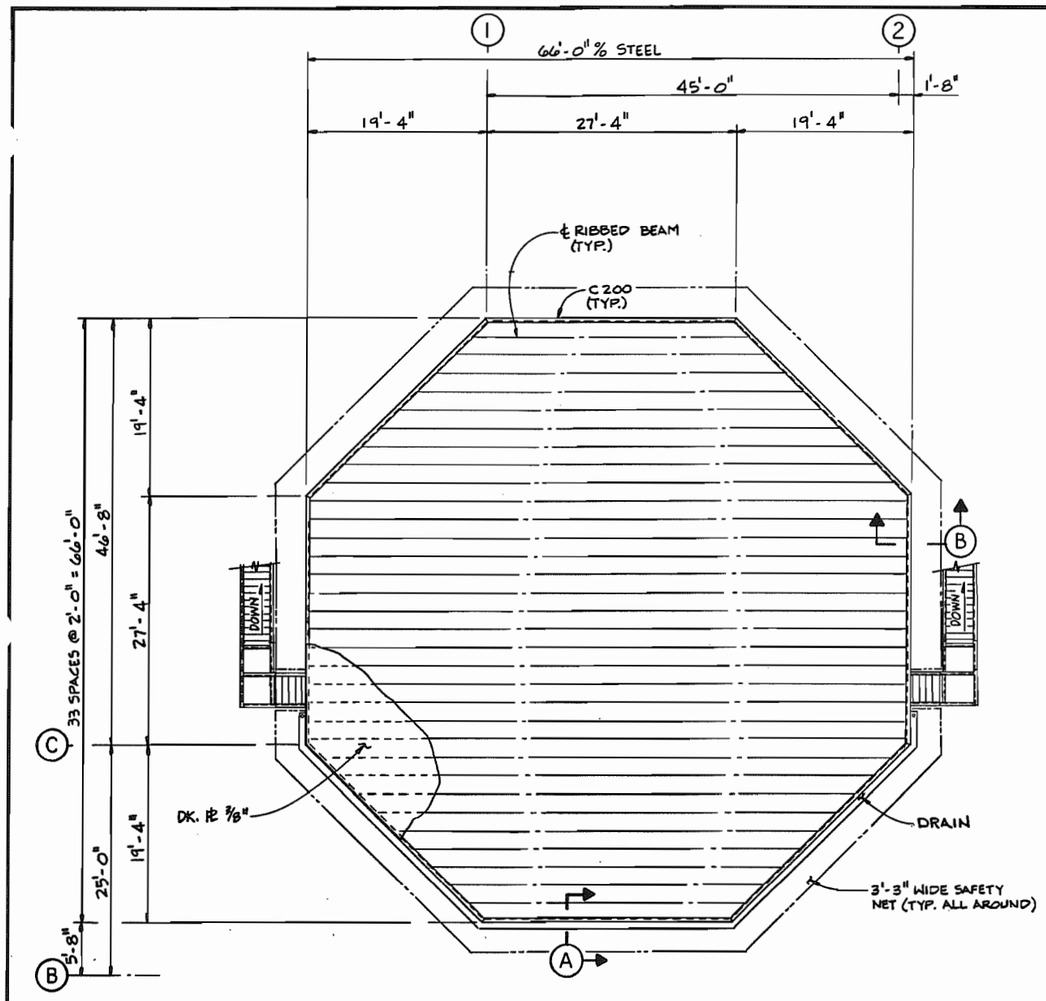

HELIDECK FRAMING PLAN

T.O.S. EL. (+) 108'-10"
SCALE 1/8" 1'-0"

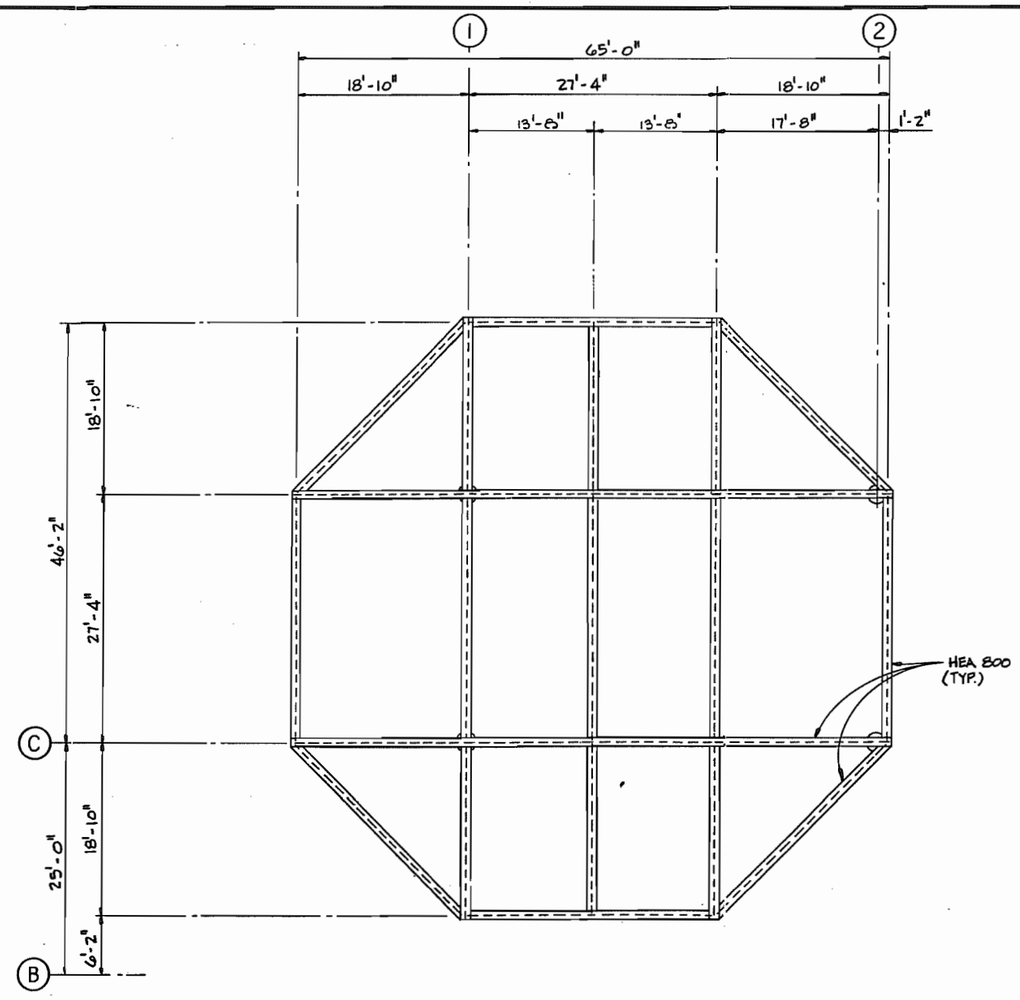

HELIDECK FRAME SUPPORT PLAN

T.O.S. EL. (+) 108'-2"
SCALE 1/8" 1'-0"

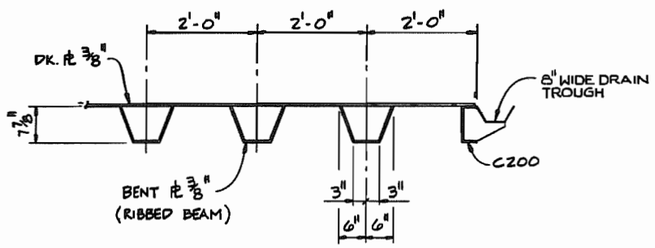

SECTION A

SCALE: 3/4"=1'-0"

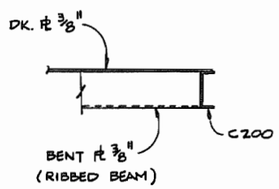

SECTION B

SCALE: 3/4"=1'-0"

CONCEPTUAL DESIGN

THIS DRAWING IS THE PROPERTY OF AND EMBODIES CONFIDENTIAL INFORMATION OF AMOCO NORWAY OIL COMPANY. THE DRAWING AND THE INFORMATION THEREON SHALL NOT BE REPRODUCED OR DISCLOSED TO ANY OTHER PARTY OR USED FOR ANY PURPOSE OTHER THAN FOR THE BENEFIT OF AND AS AUTHORIZED BY AMOCO NORWAY OIL COMPANY.

NO.	DESCRIPTION	DR	CK	AP	AP	DATE
1	CONCEPTUAL DESIGN					

REVISION

APPROP. NO. PC 556

APPROVED FOR CONSTRUCTION
BY _____ DATE _____

PROCESS		MECHANICAL	
BY		BY	

DR	DATE	CK	DATE	AP	DATE

Amoco Norway Oil Company

HELIDECK FRAMING PLANS
HOD PLATFORM

SCALE	FILE NO	DWG NO	REV
		P-5042	1

EXHIBIT 5.30

X-355

PIG RECEIVER

SIZE: 12" I.D. x 14'-0" F/S
OPER. PRESS: 160 PSI, TEMP: 140°F (MAX)
DESIGN PRESS: 1395 PSI, TEMP: 165°F

V-301

SEPARATOR

SIZE: 12'-8½" OD x 33'-7 9/16" TT
OPER. PRESS: 130 PSI; TEMP. 110°F
DESIGN PRESS: 150 PSI; TEMP. 350°F
HYDRO: 280 PSIG

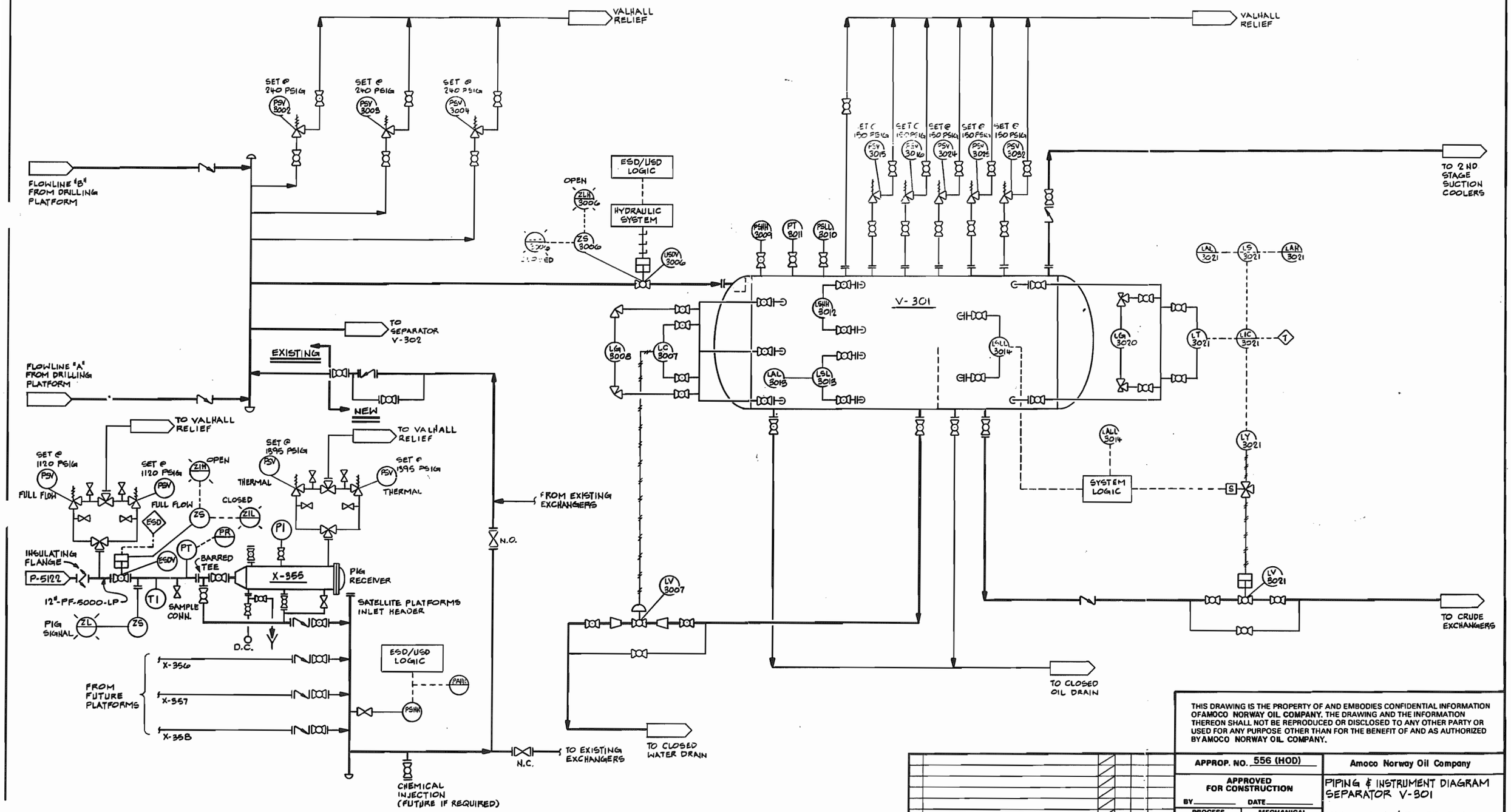

THIS DRAWING IS THE PROPERTY OF AND EMBODIES CONFIDENTIAL INFORMATION OF AMOCO NORWAY OIL COMPANY. THE DRAWING AND THE INFORMATION THEREON SHALL NOT BE REPRODUCED OR DISCLOSED TO ANY OTHER PARTY OR USED FOR ANY PURPOSE OTHER THAN FOR THE BENEFIT OF AND AS AUTHORIZED BY AMOCO NORWAY OIL COMPANY.

NO.	DESCRIPTION	DR	CK	AP	AP	DATE
	REVISION					

APPROP. NO. 556 (HOD)

APPROVED FOR CONSTRUCTION
BY_____ DATE_____

PROCESS BY	DR	DATE	CK	MECHANICAL BY	DATE	AP	DATE
TEC	10-1-87						

Amoco Norway Oil Company

PIPING & INSTRUMENT DIAGRAM
SEPARATOR V-301

VALHALL "A" PLATFORM

SCALE	FILE NO	DWG NO	REV
N.A.		P-5170	1

EXHIBIT 5.31